ALLIANCE
Machine Systems Europe BV

ALLIANCE

Machine Systems Europe BV

J&L INDUSTRIES LLC

TEI

SERCO HOLLAND

ASC FALLMAC

TANABE

SRP EUROPE

ALLIANCE
Machine Systems Europe BV

TANABE

International Co., Ltd.

Specialty Folder-Gluer

JDengineers

Tanabe and JD Engineers represent you
Tanabe's next Generation

Tanabe's next Generation

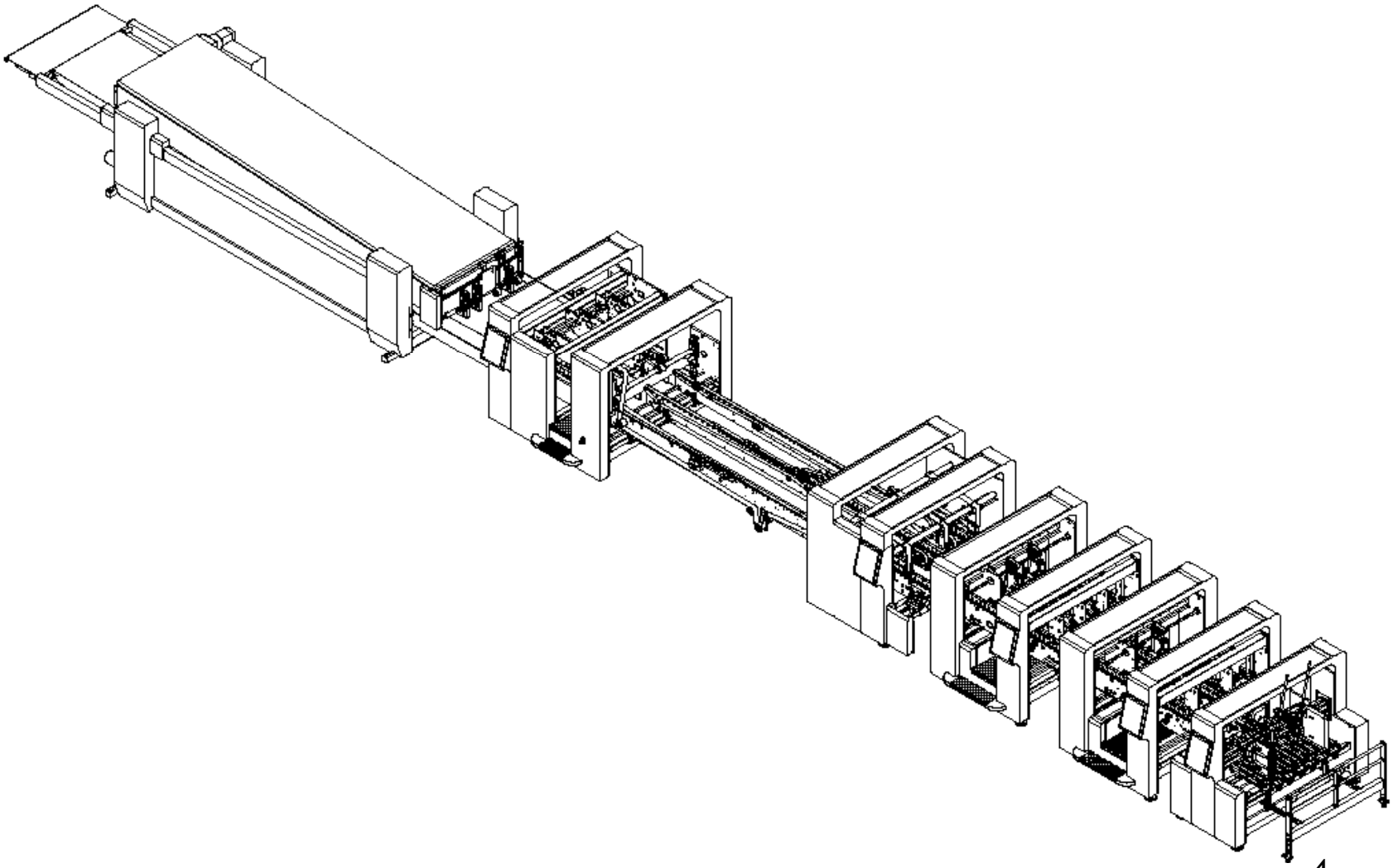

Tanabe's next Generation

Tanabe's next Generation

Higher output

Better quality

More Functions

Tanabe's next Generation

Higher output

- More m^2 Board
- Higher availability
- Controlled detection
- Video control
- Modular design

- Less board jams
- Quick fault resolving

- Servo controlled
- Installation time

Tanabe's next Generation

Better Quality

- Less waste
- Higher Accuracy
- ECO Friendly
- Operation use
- JDIS Service

Low energy consumption

(more than 50% less)

Tanabe's next Generation

More Functions ⇨

- Board ejection system (under development)
- JDIS Service
- Easy function upgrade (modular design)
- Integration with Twin / Tri feed

Feeder section

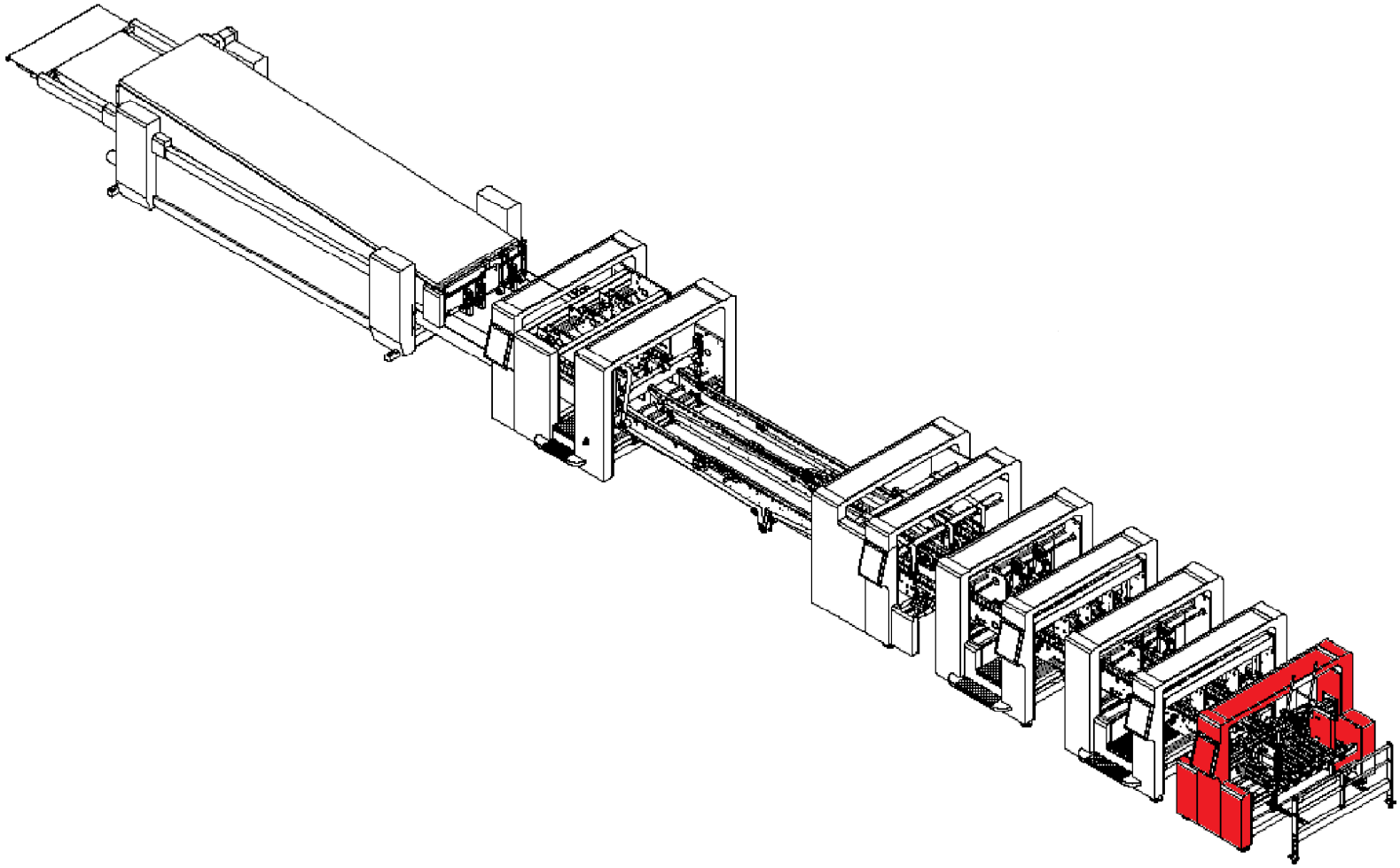

Feeder section

A total number of 8 feeding belts, 4 of which are vacuum supported.

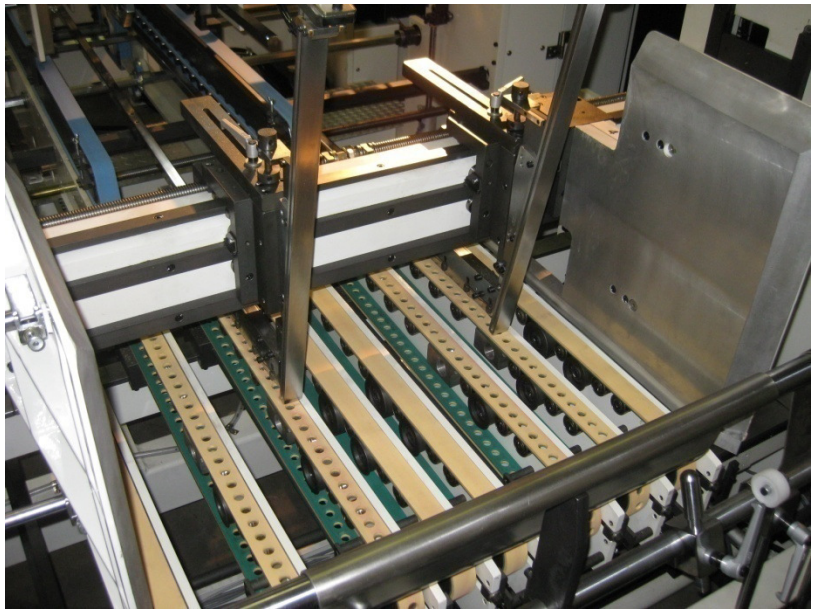

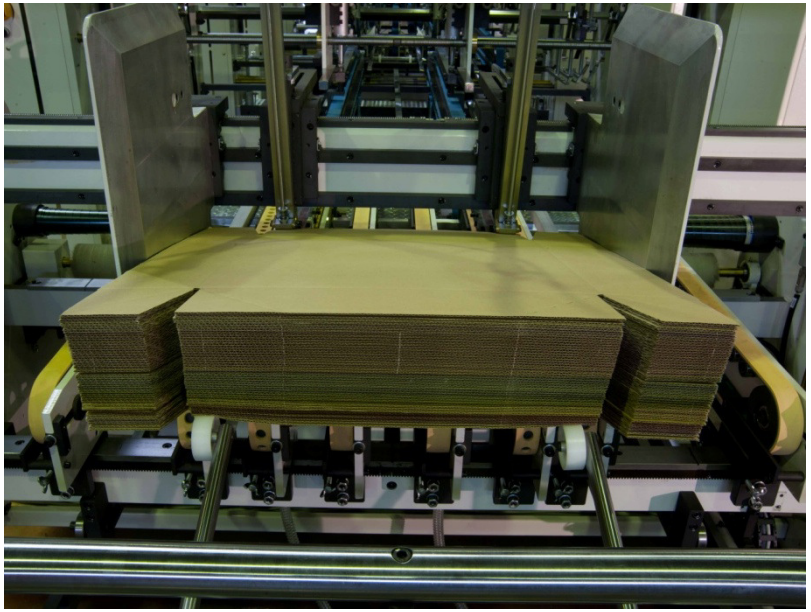

Constant pressure pile press by means of 2 pneumatic cylinders.

Feeder section

A rotational brush ensures that all feeding belts remain clean.
Therefore the feeding performance does not deteriorate.

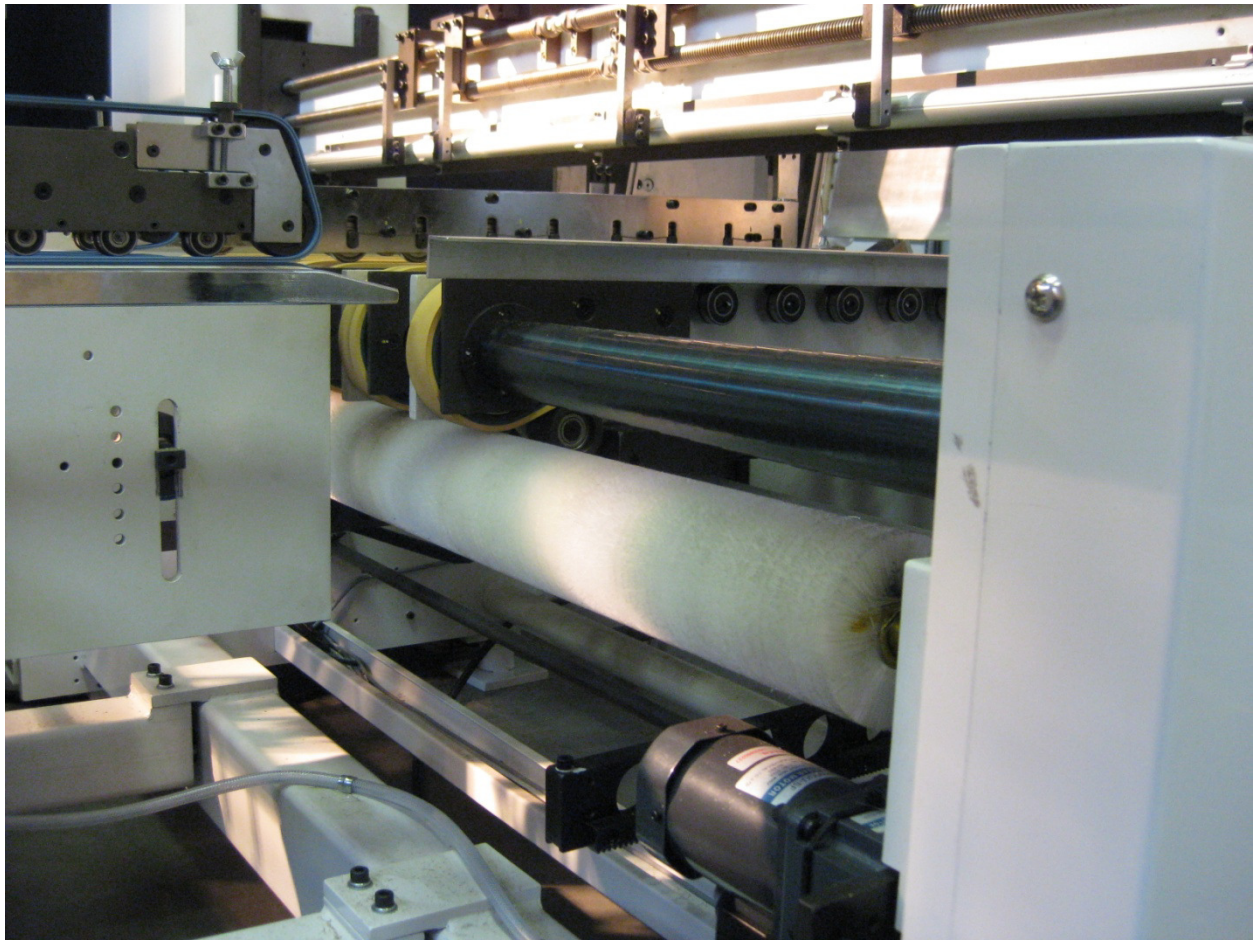

Feeder section

- Drive through servo motor.
- Modular design.
- Start-Stop drive principal possible.
- 600mm longer than Millennium design.
- Less pressure on bottom sheet,

  result in no skewing of sheets.

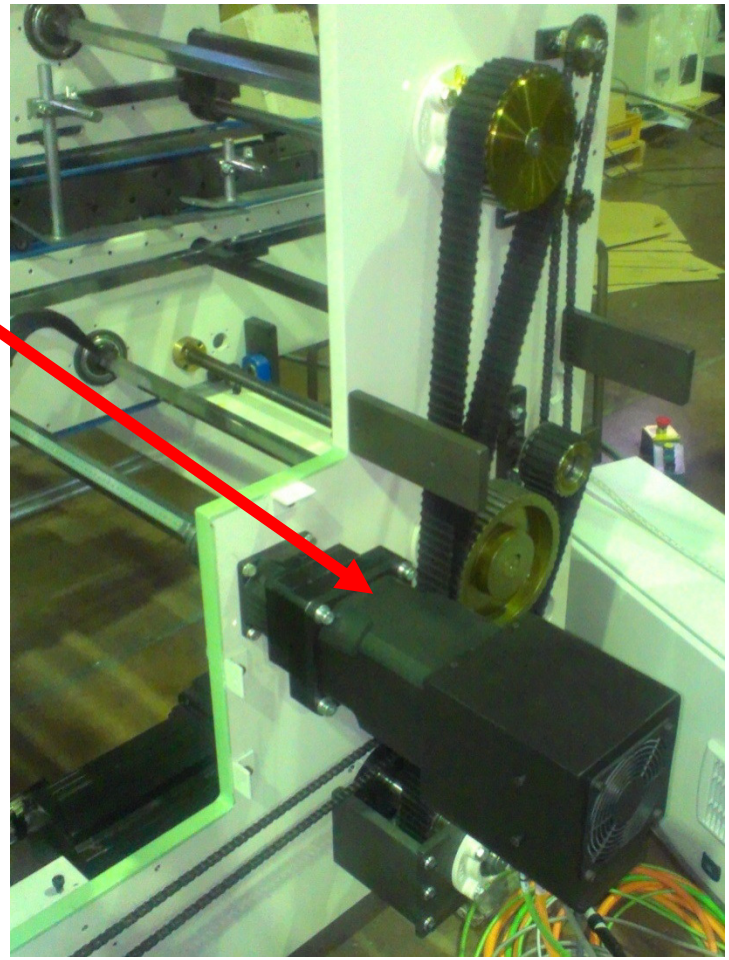

A & B section (front & back folding)

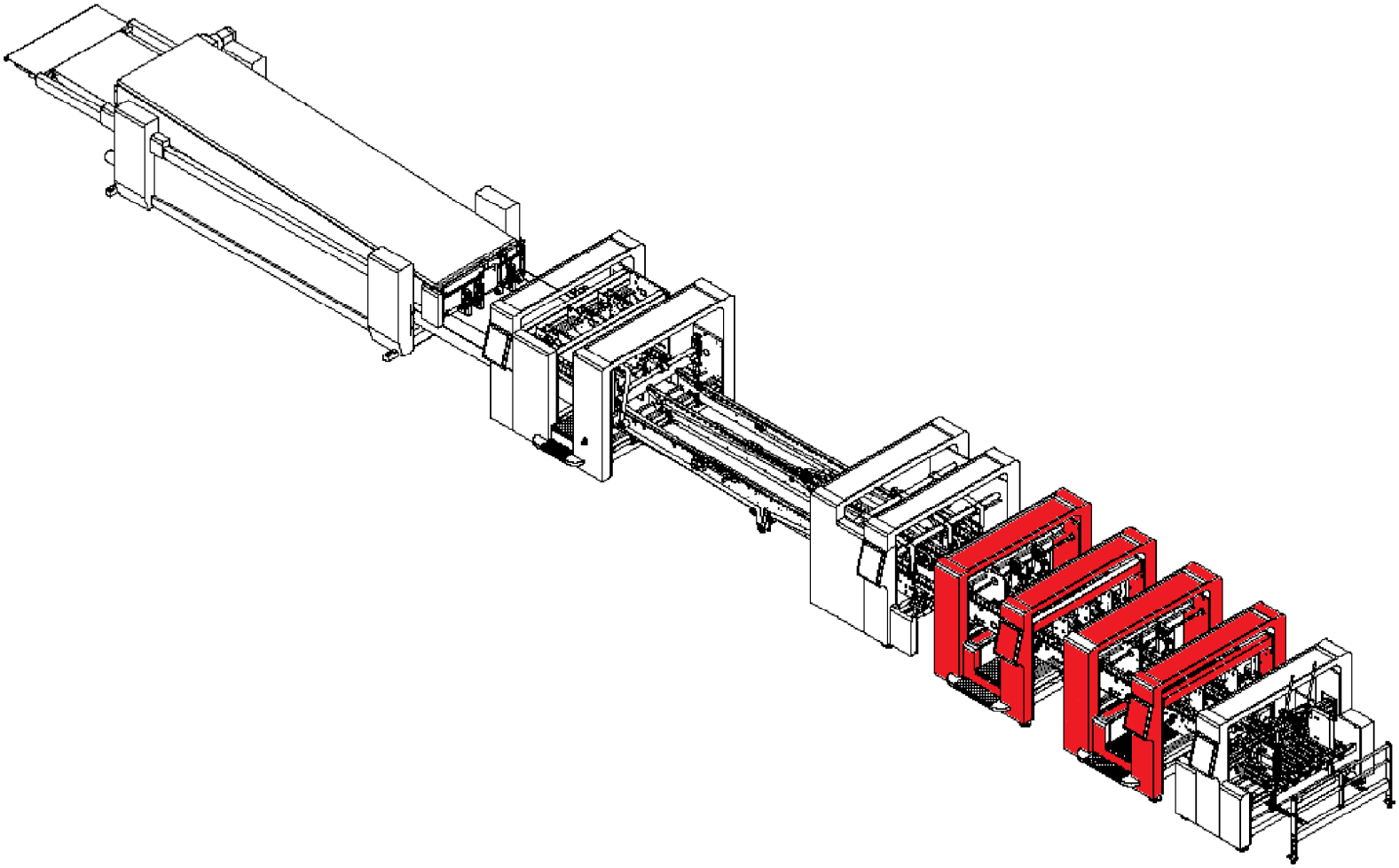

A & B section (front & back folding)

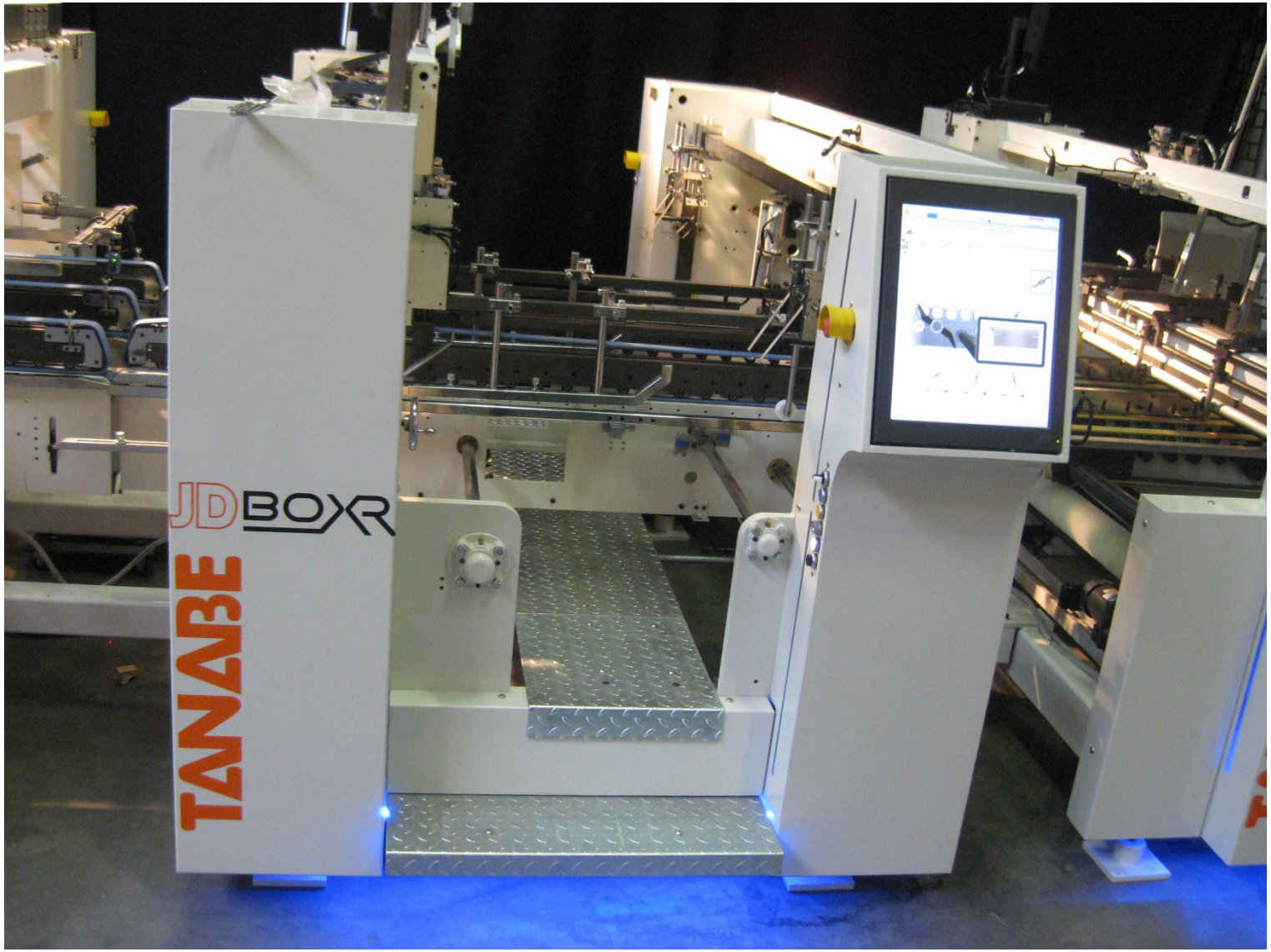

A & B section (front fold process)

Front fold by means of JD special fold (4/6 corner trays, lock bottom boxes).

A & B section (front & back fold process)

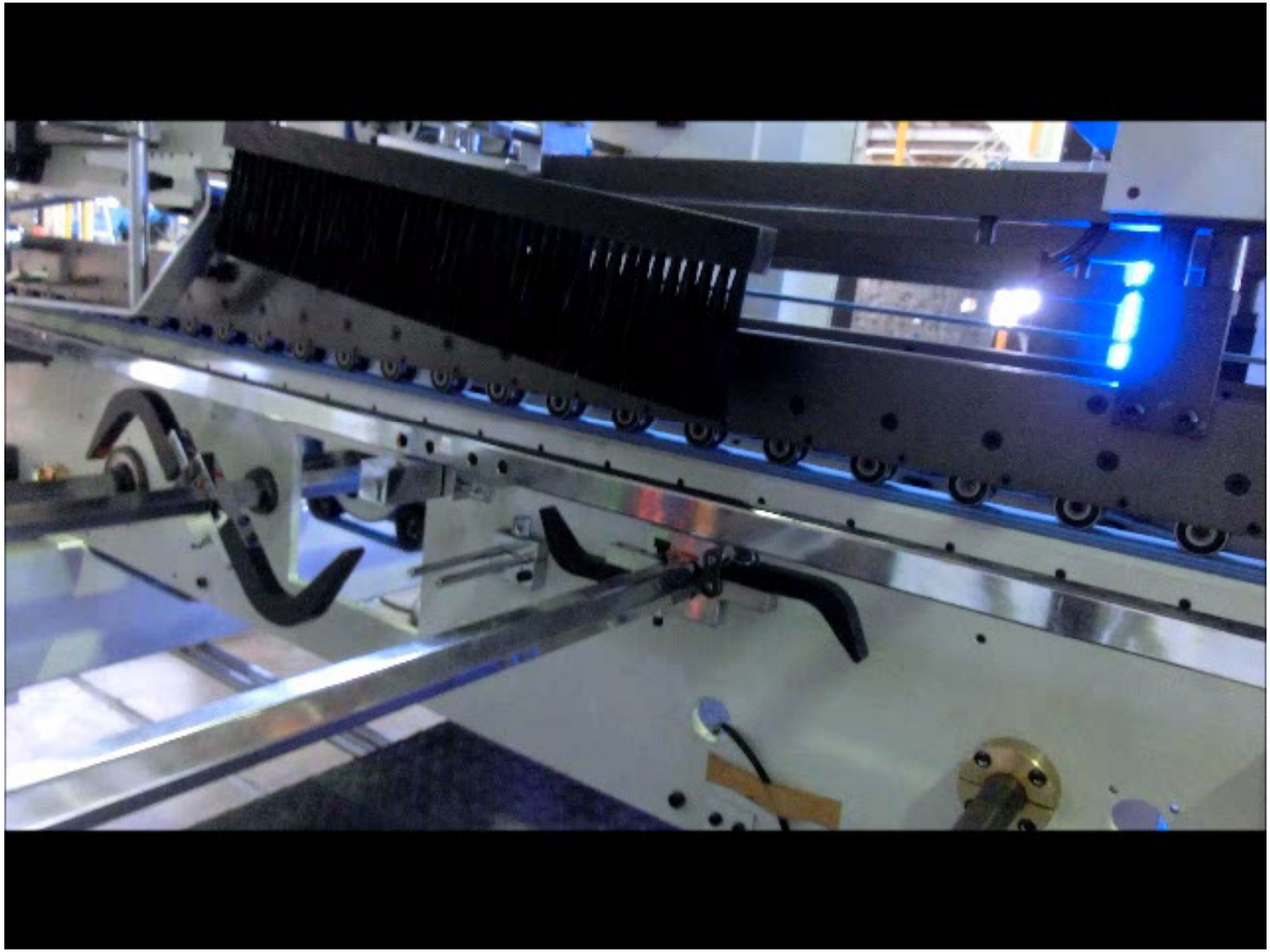

A & B section (back fold process)

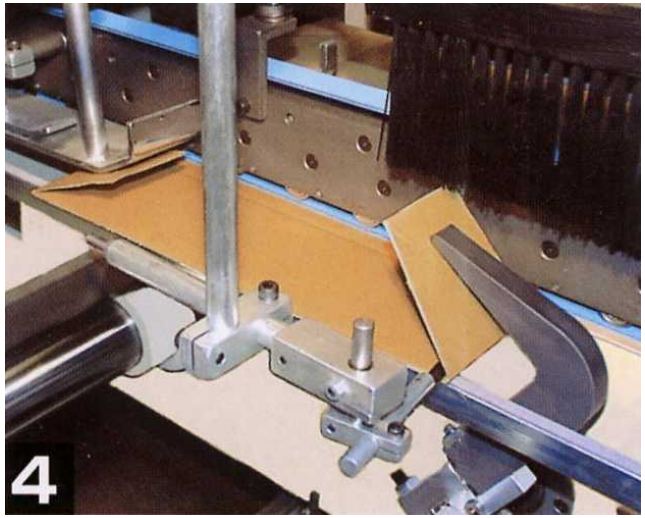

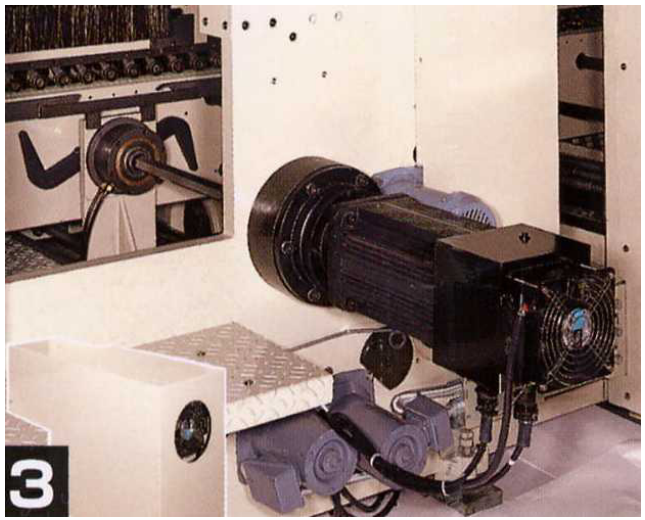

- Back fold by means of fold hooks (4/6 corner trays).
- Back fold hooks are driven by servo motors, meaning direct drive (no clutch), high speed and high accuracy.
- Back fold timing is computer set-up.

A & B section (general)

Cast iron folding shoes (available in 2 width sizes) for folding of diagonals (4/6 corner trays, lock bottom boxes).

A & B section (general)

In order to prevent folded flaps from popping back, there is a number of tools that can be applied to fixate flaps as the blank moves through the machine:

- Brushes
- Rollers
- Guiding plates/profiles

A & B section (general)

Top guiding plates/profiles can be mounted in the machine at just about any position

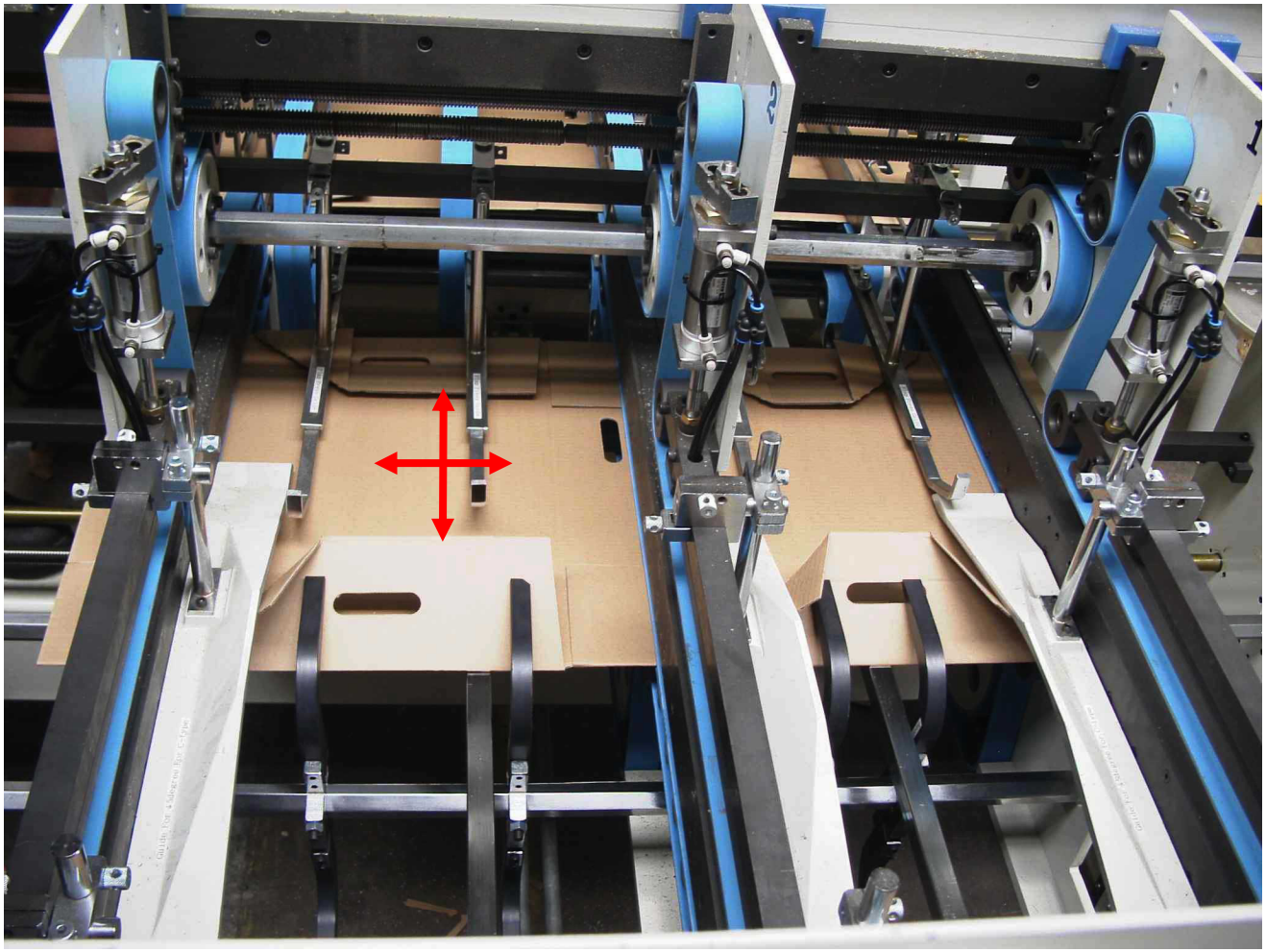

A & B section (general)

- Top and bottom carriers are separately driven.
- Top carriers can be lifted pneumatically (in case of a jam).
- The pressure put on the blank (i.e. gap between upper and lower carrier) is manually adjustable through the use of different size stops at the compressed air cylinders.

A & B section (general)

- Drive through servo motor.
- Modular design.
- Partial stopping of machine, boxes after stopping point run further.
- Box tracking available, wrong boxes can be marked.
- For setting up carriers, linear measuring system in place. Always exact position known.
- Touch screen on every unit available. (option)

Glue application

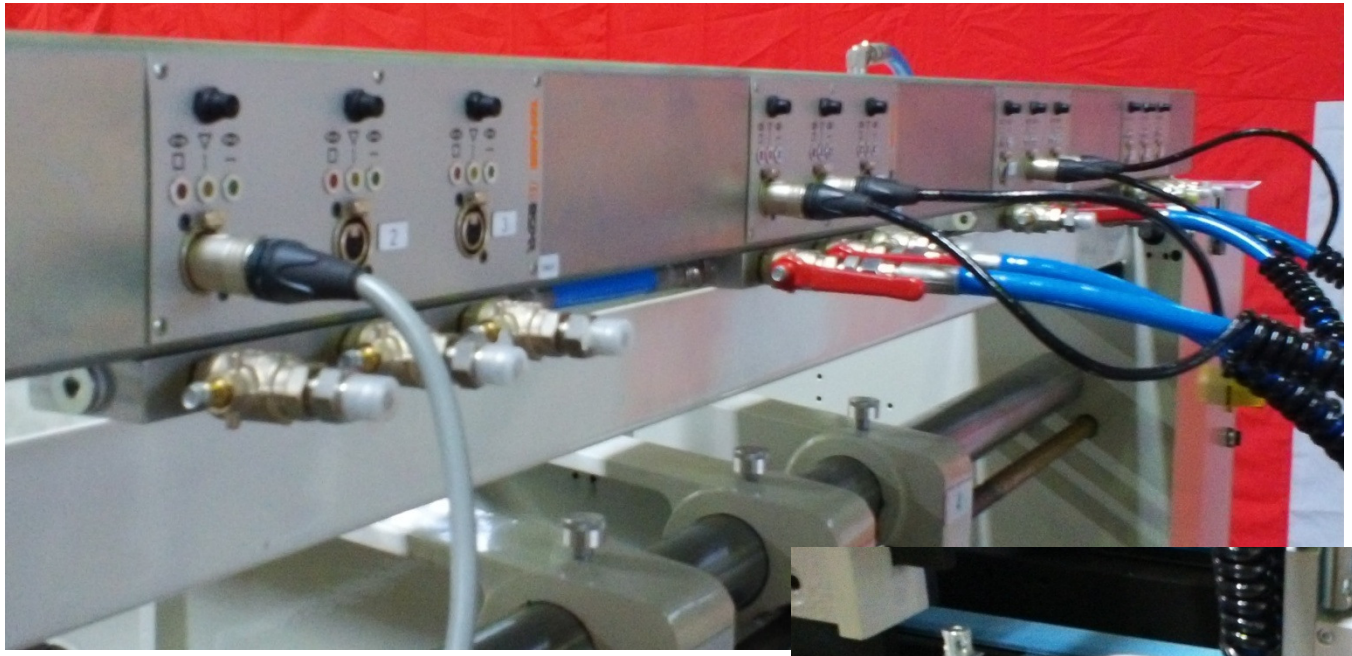

Glue application

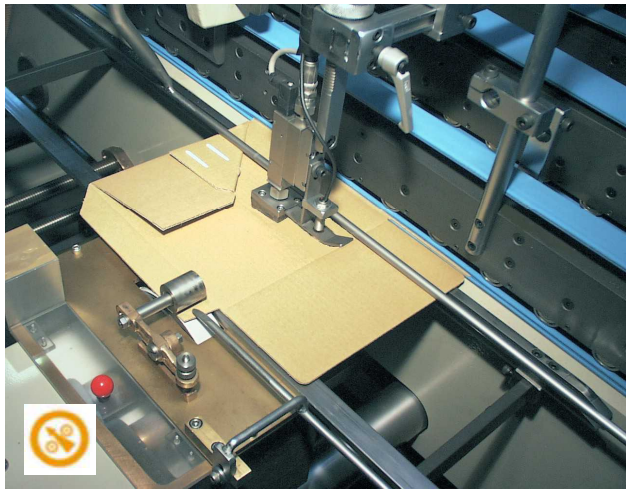

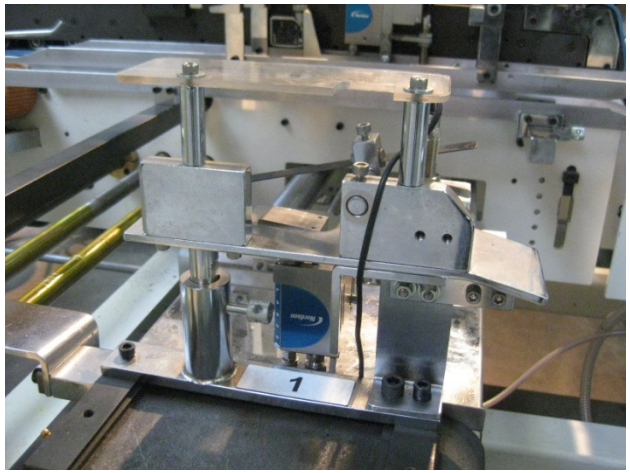

- Prepared for different brands of glue applications (Nordson, Valco, HHS, ….)
- Glue guns can be positioned anywhere in the folder-gluer, but typically in A and B unit.
- Cold and also hot melt systems can be integrated.
- Glue dispensing possible with contact or non-contact glue heads.
- Bottom gluing through glue gun or wheel.
- Set-up of glue system through computer (glue length and glue pressure control).
- Quick connectors are used for ease of use.

Glue application

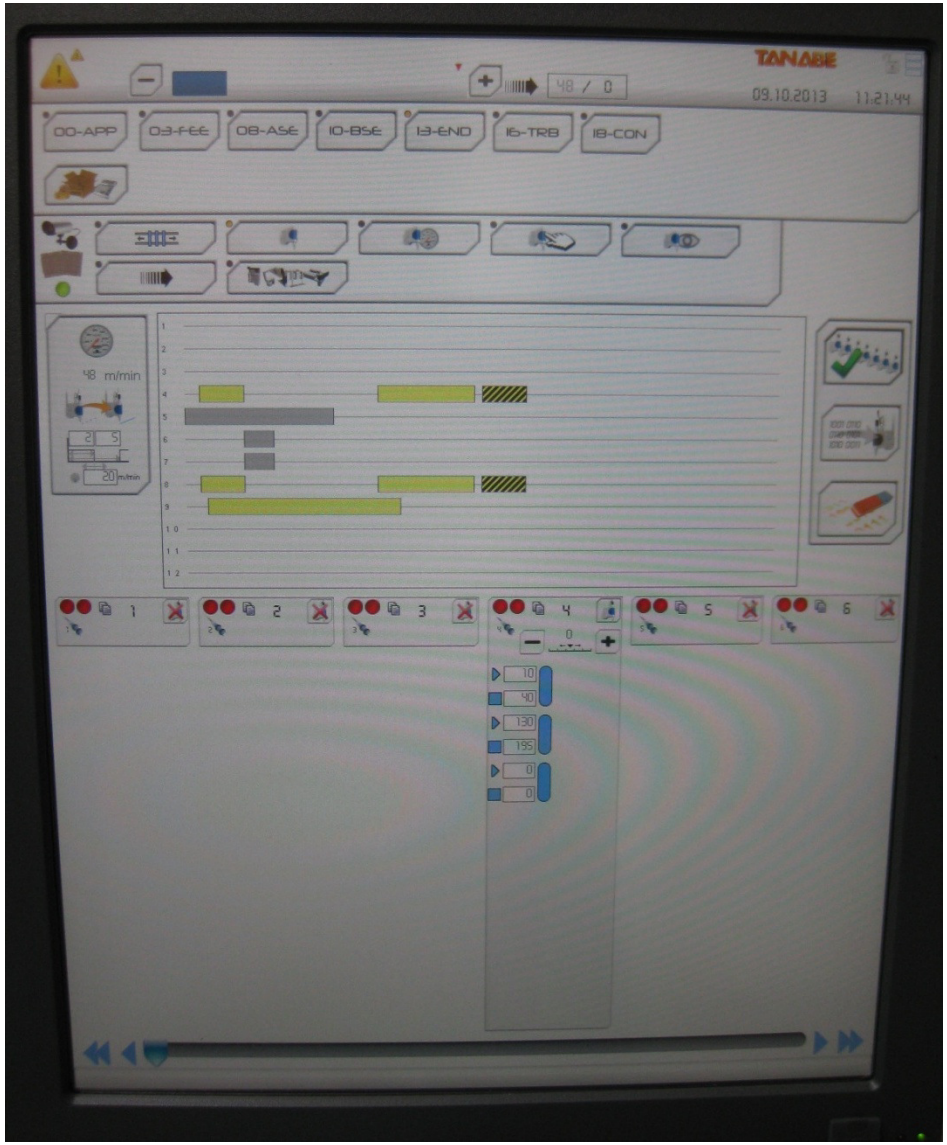

Glue setting per gun

Final fold unit (side panel inward folding)

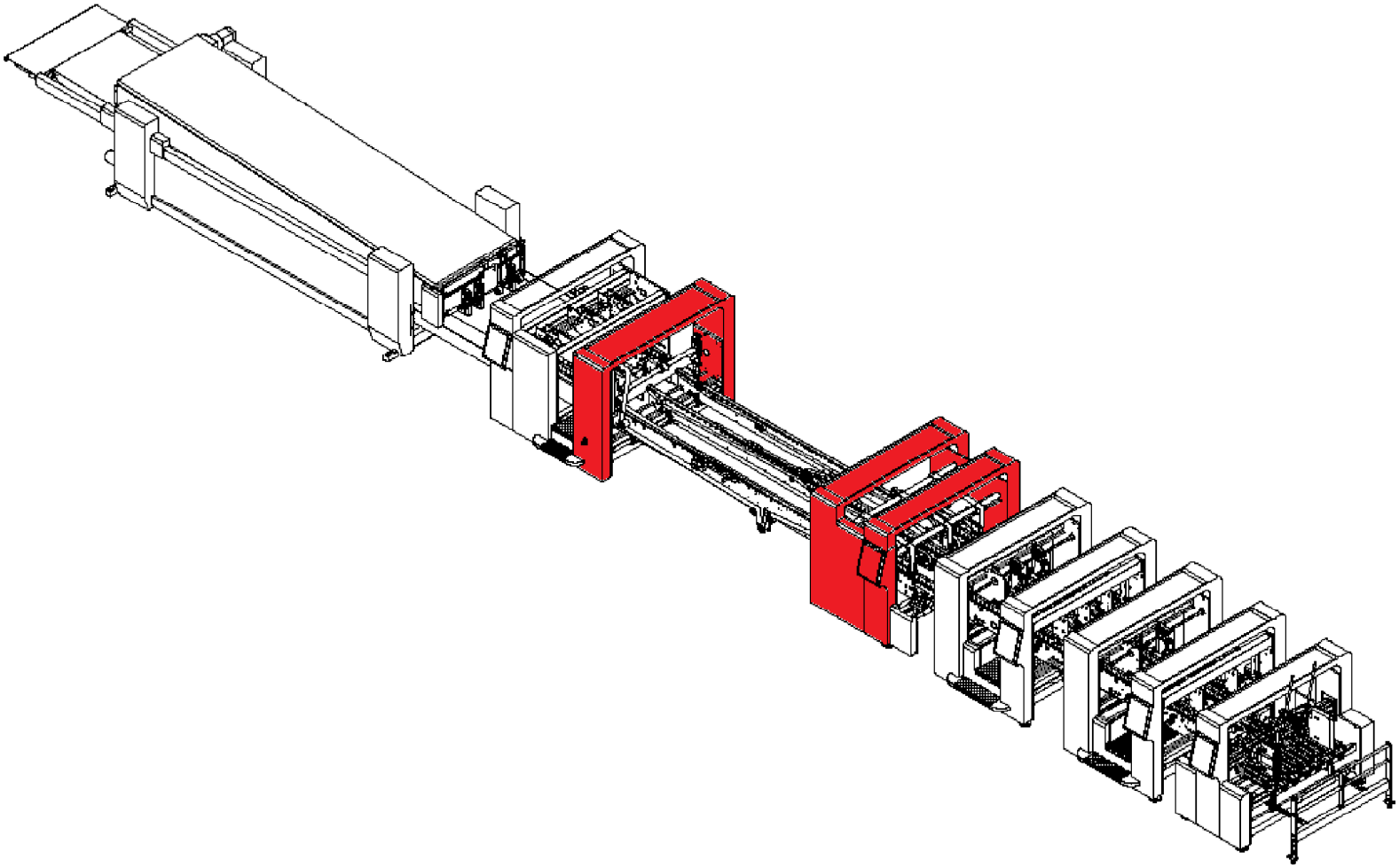

Final fold unit (side panel inward folding)

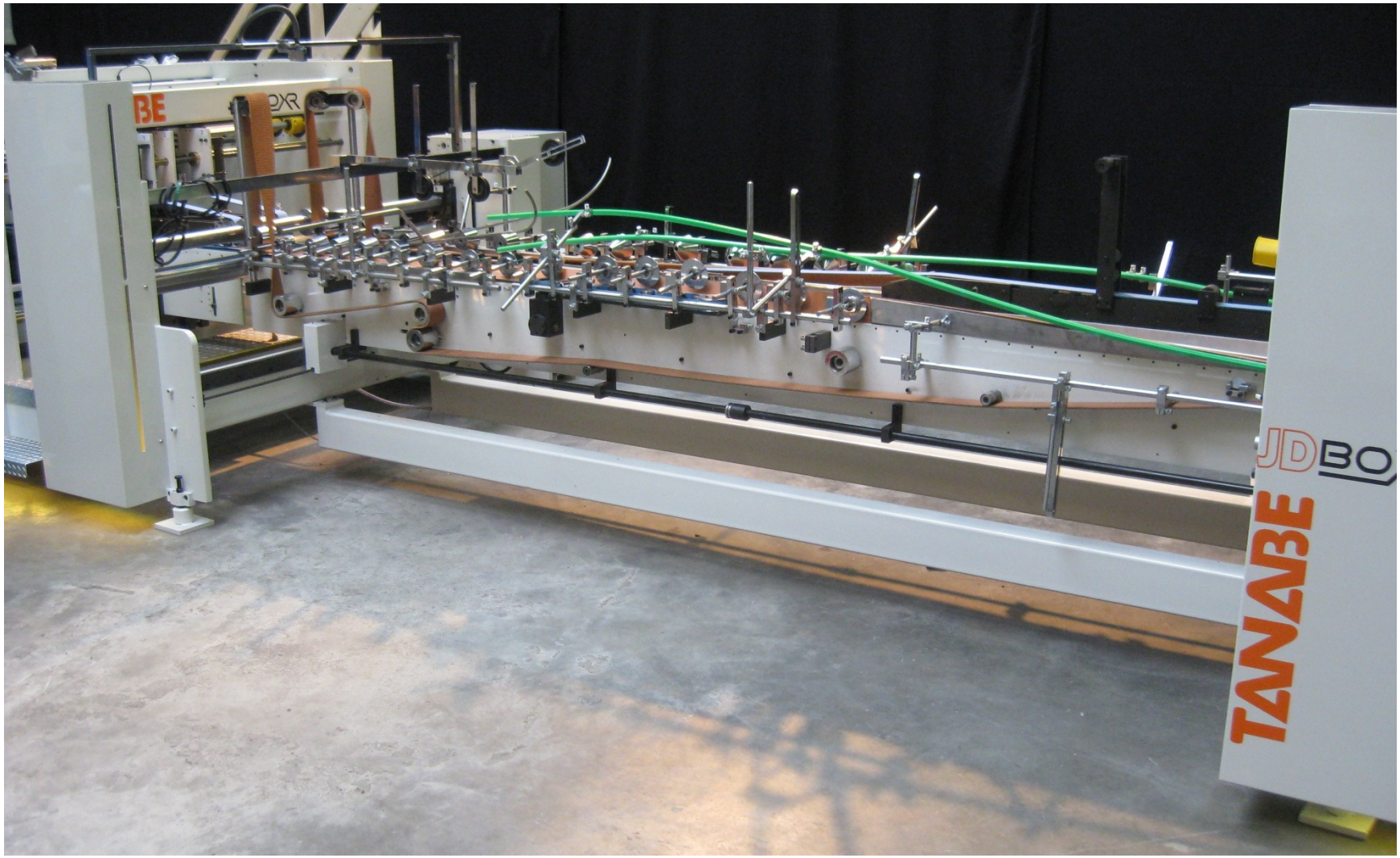

Final fold unit (side panel inward folding)

- Extra long final fold section to ensure accurate folding (apprx. 4.5 mtr at 1700 machine).
- Super grip folding belts, width of 80mm.
- Belt speed of left and right folding belt, separately adjustable (servo driven).
- Side guiding using belts.
- Adjustable rolls.
- Additional third belt in-between folding belts to support transport of blank.

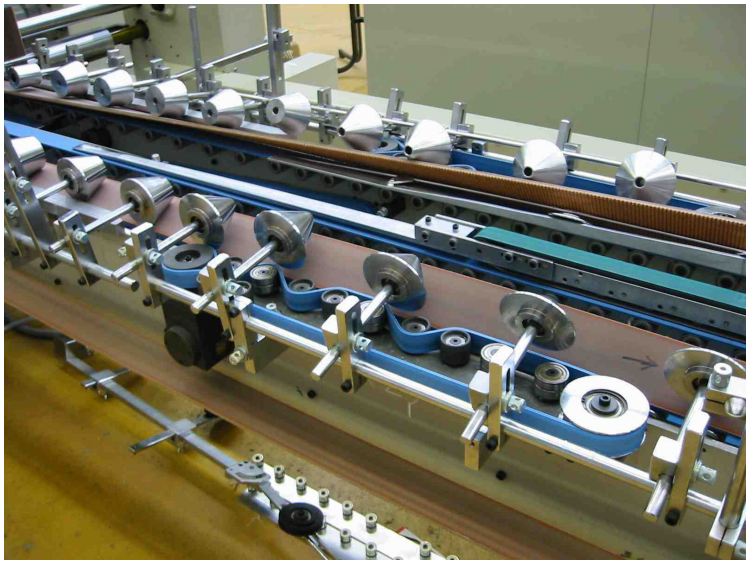

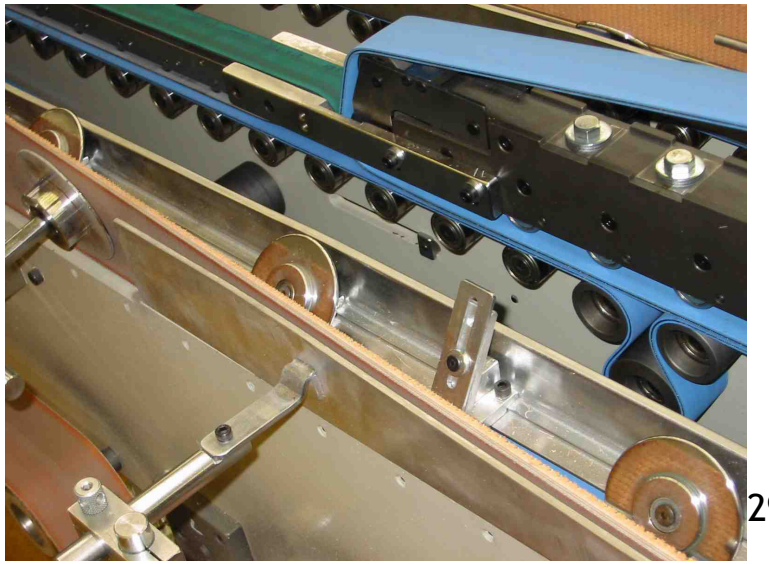

Final fold unit (general)

- Drive through servo motor.
- Modular design.
- Folding belts can be set individually to different speeds due to the servo drives. Due to the servo technology very accurate.
- 16 connections for glue applicators and sensors available. Max 16 each glue bridge.
- Standard equipped with glue applicator for the glue flap. Glue wheel still available as option.

6 corner infold tray tooling (option)

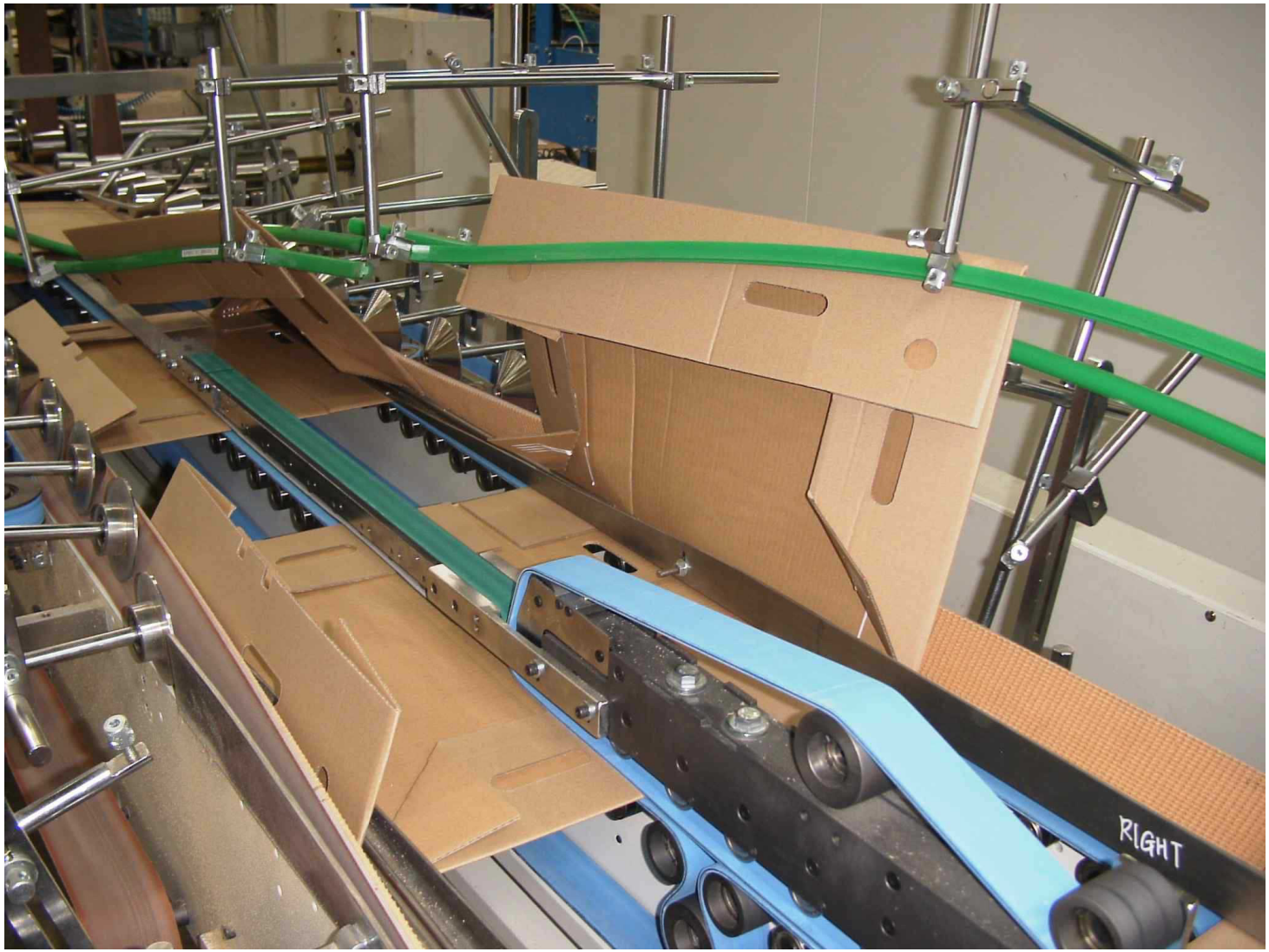

Trombone unit (general)

- Speed of left and right transport belt separately adjustable (minimizing fish-tailing).
- Jam monitoring system.
- Computer controls (depending on blank length) speed ratio between trombone unit and compression conveyor.
- Adjustable top and bottom carriers.

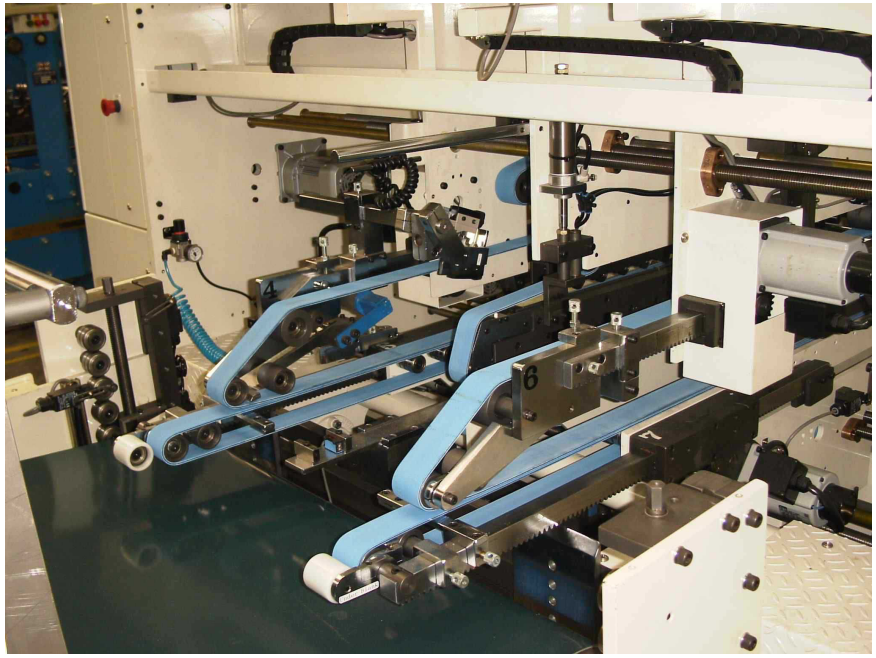

- Drive through servo motor.
- Modular design.
- New design pneumatically stoppers to square the folded boxes. Higher accuracy.
- Up to 4 numbers for the batch kicker can be used per bundle.

Trombone unit (shingling)

Under shingle

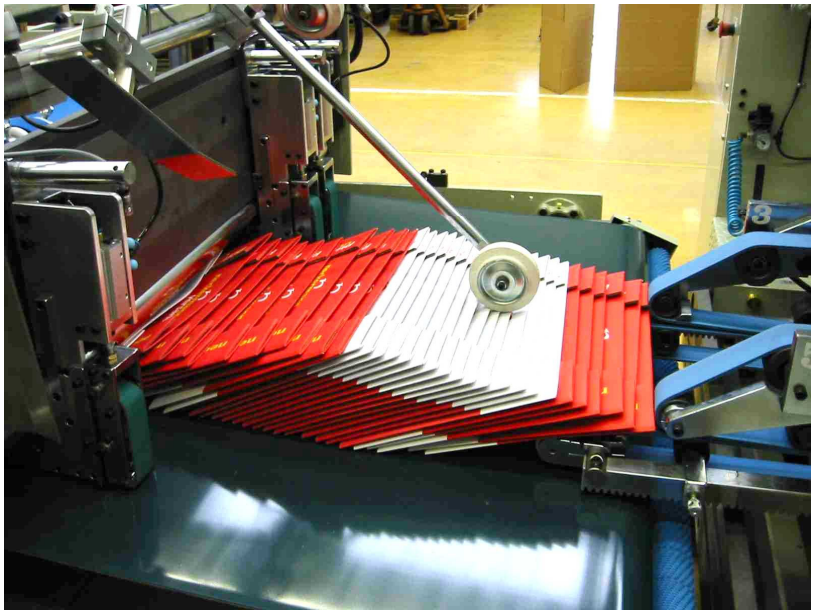

Over shingle

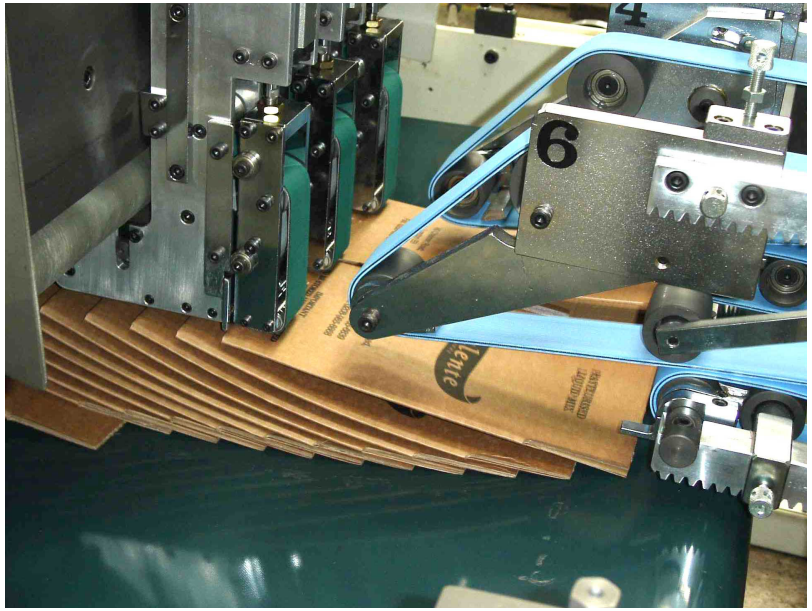

Trombone unit (shingling)

UV ink spray system

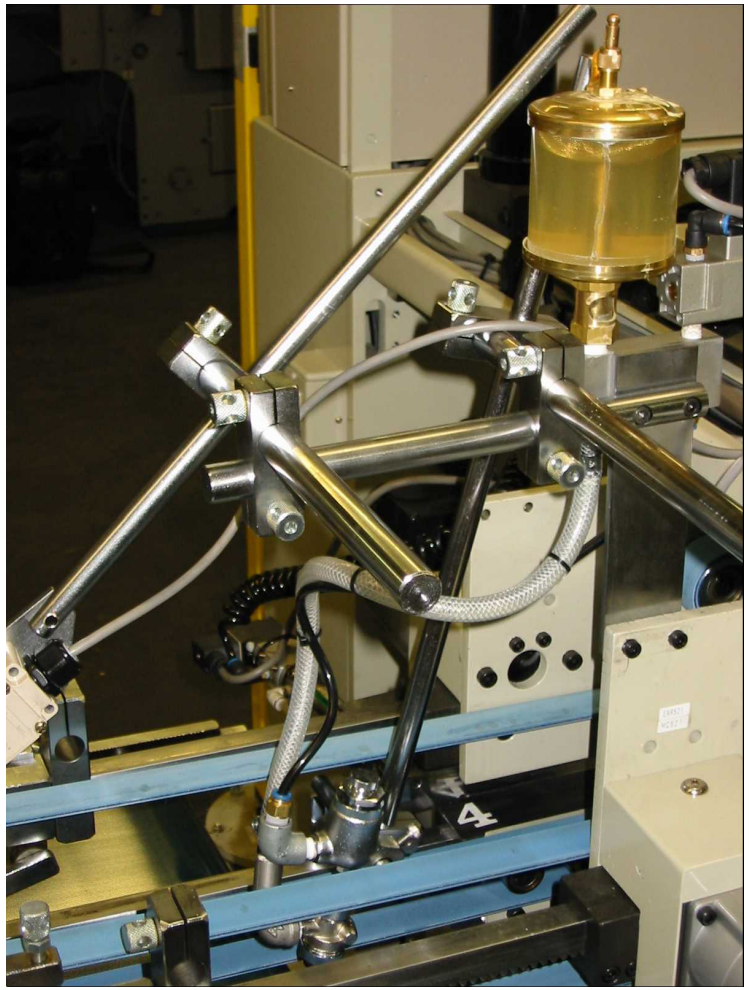

Mechanical batch kicker

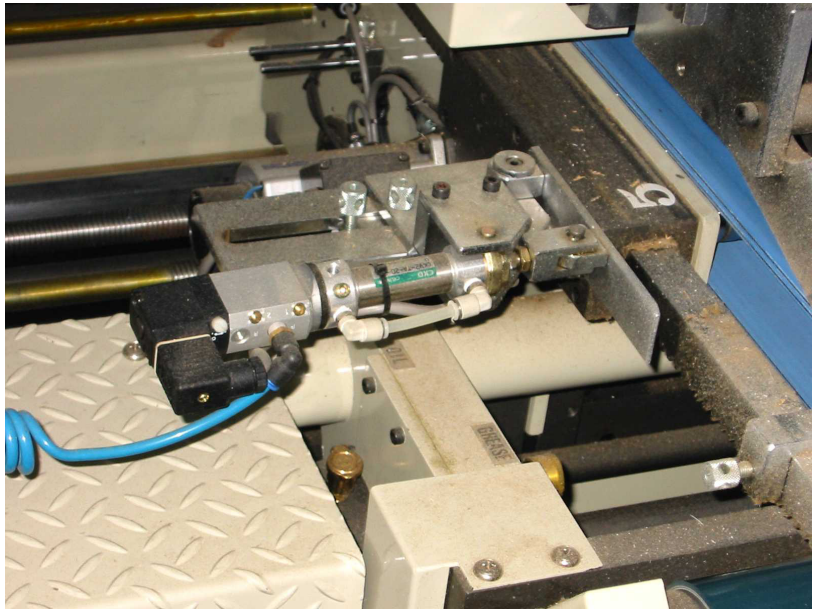

Compression conveyor

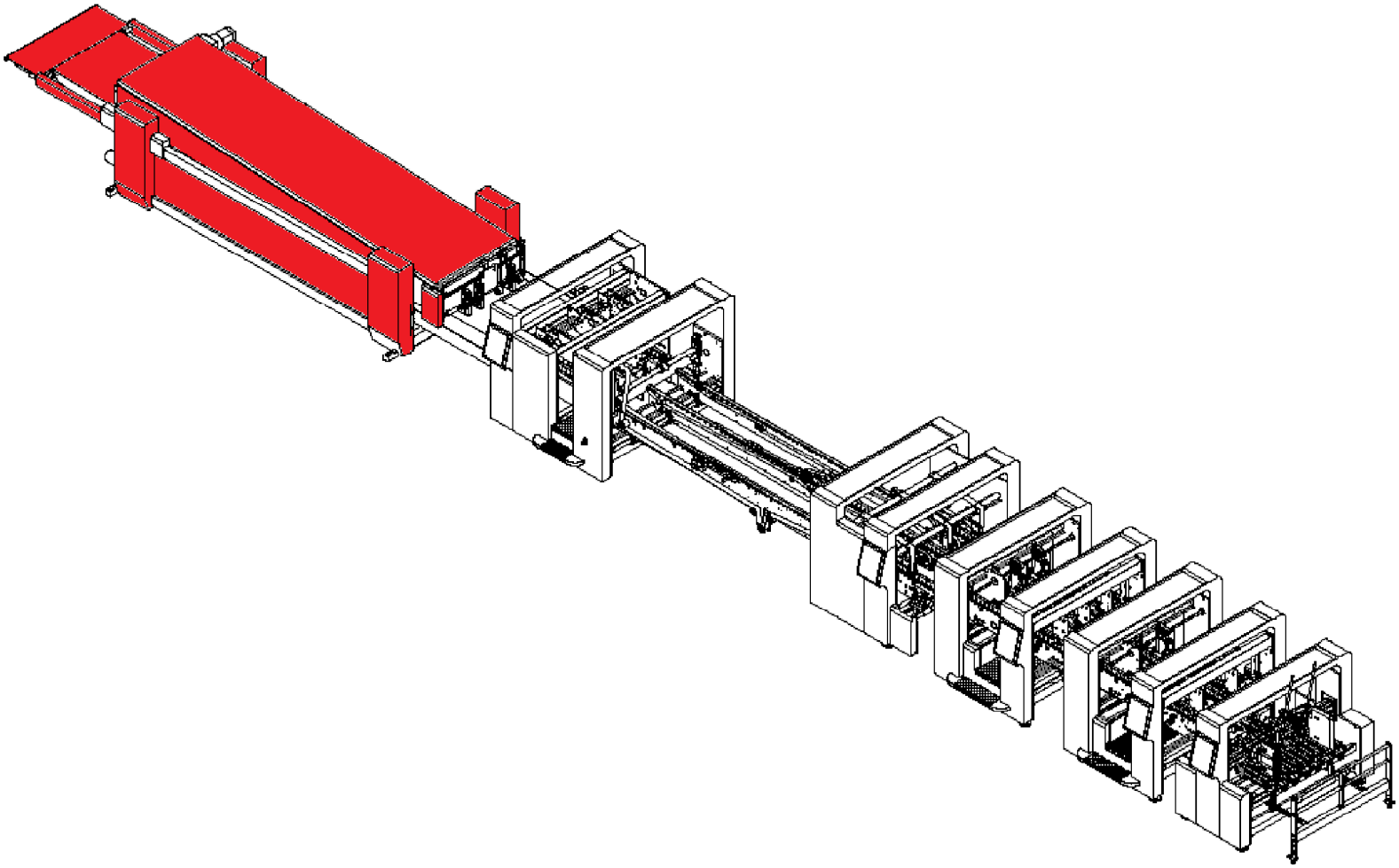

Compression conveyor

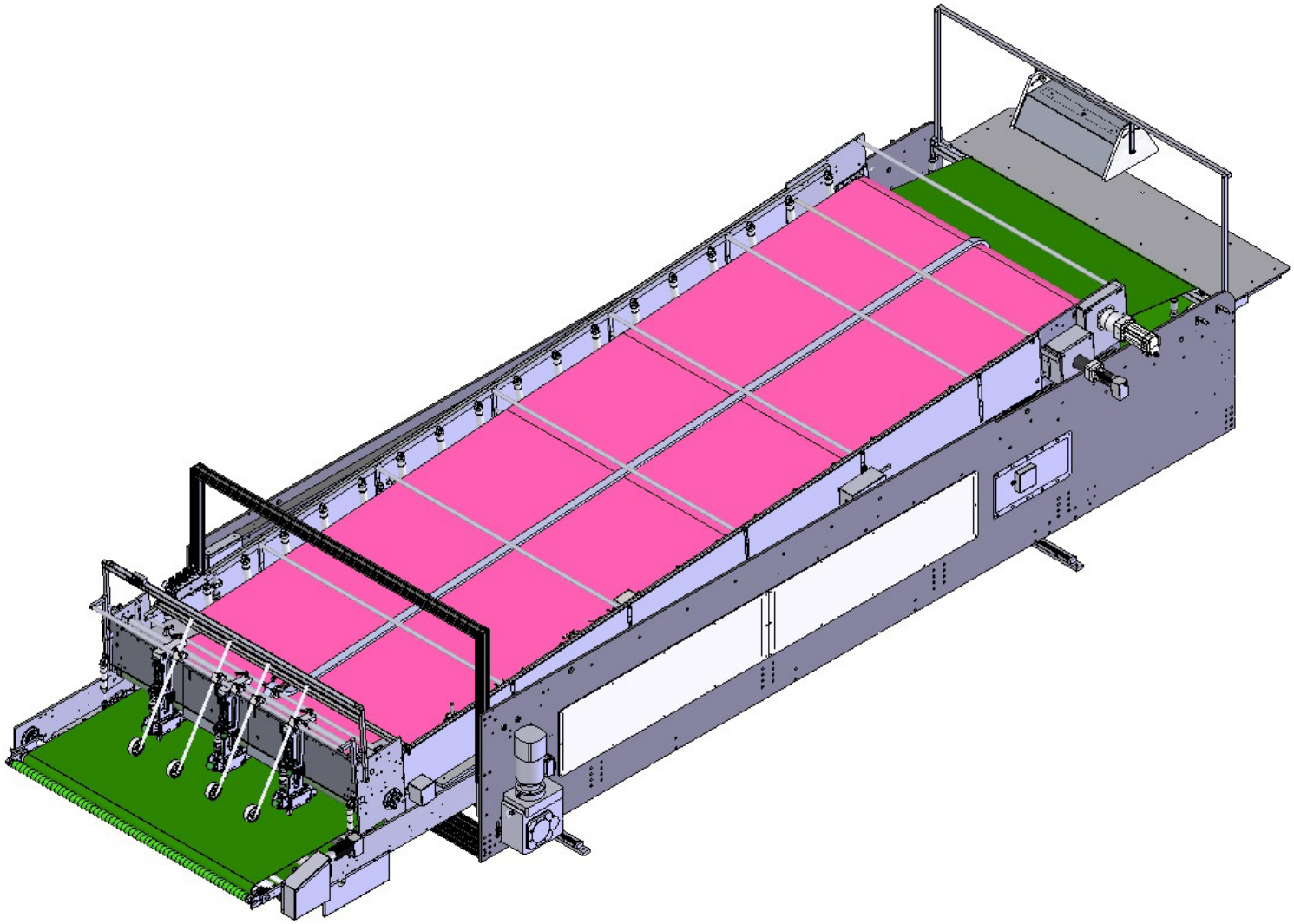

Compression conveyor

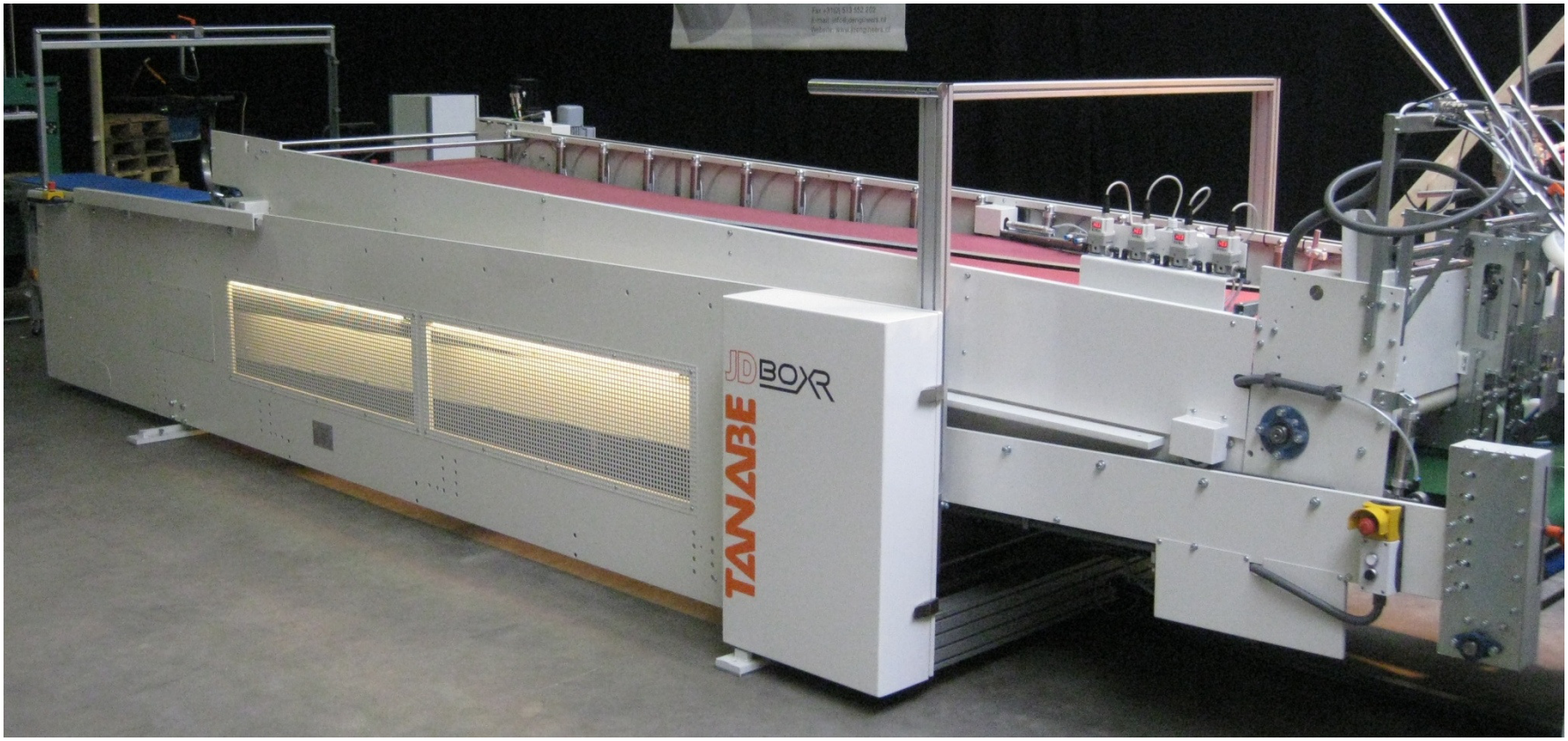

Compression conveyor

- Drive through servo motor.
- Modular design.
- Level control sensor for detecting and controlling hopper level at entrance compression section.
- All pneumatically settings will be stored and retrieved by computer.
- Front end height set by servo motor.
- Front roll height set by servo motor.
- All positions will be stored and retrieved by computer.
- 1600mm retractable length of upper belt.
- 5500mm curing length.
- Glue lap pressure device

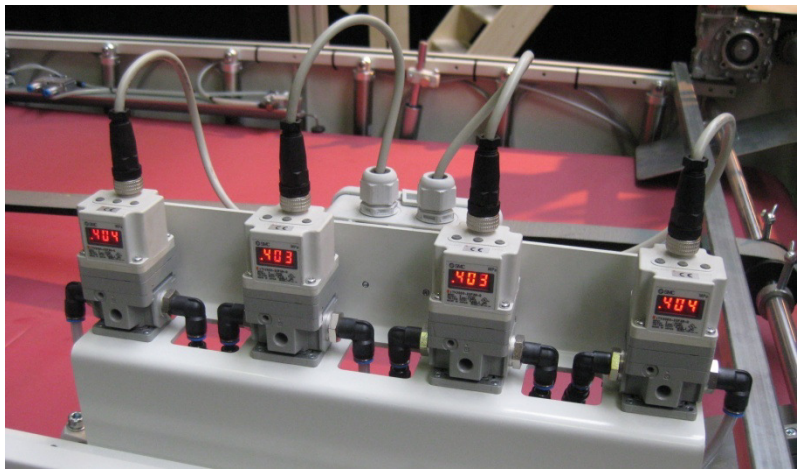

Compression conveyor (squaring)

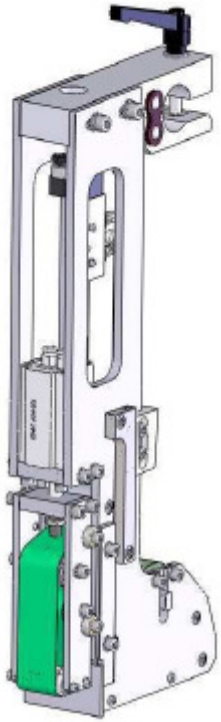

Three LSU squaring units that can move up/down pneumatically, equipped with driven belts.

For each blank, the units will move down, the belts will drive the blank against a stop and thus squaring the blank. Then the units move up till the next blank arrives.

Large ratio (width: length) boxes and all other boxes that are difficult to square with the conventional squaring devices, benefit from this optional functionality.

Compression conveyor (squaring)

JDIS service

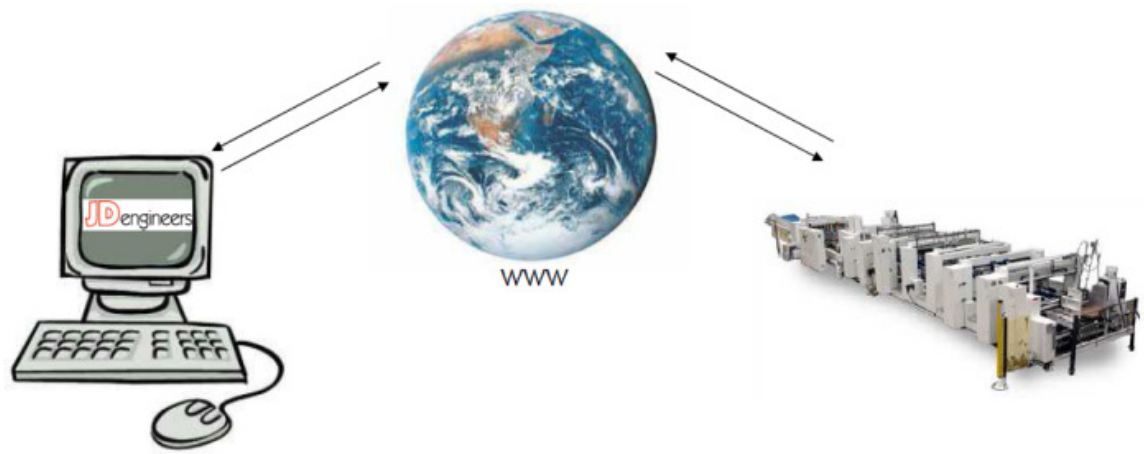

- Offers remote I/O Check
- Support with fault resolving
- Provides more machine availability.
- Provides Function expansion

Safety

Improved safety system

- Light screens close on the machine.
- Let lights to indicate machine state.

Control system

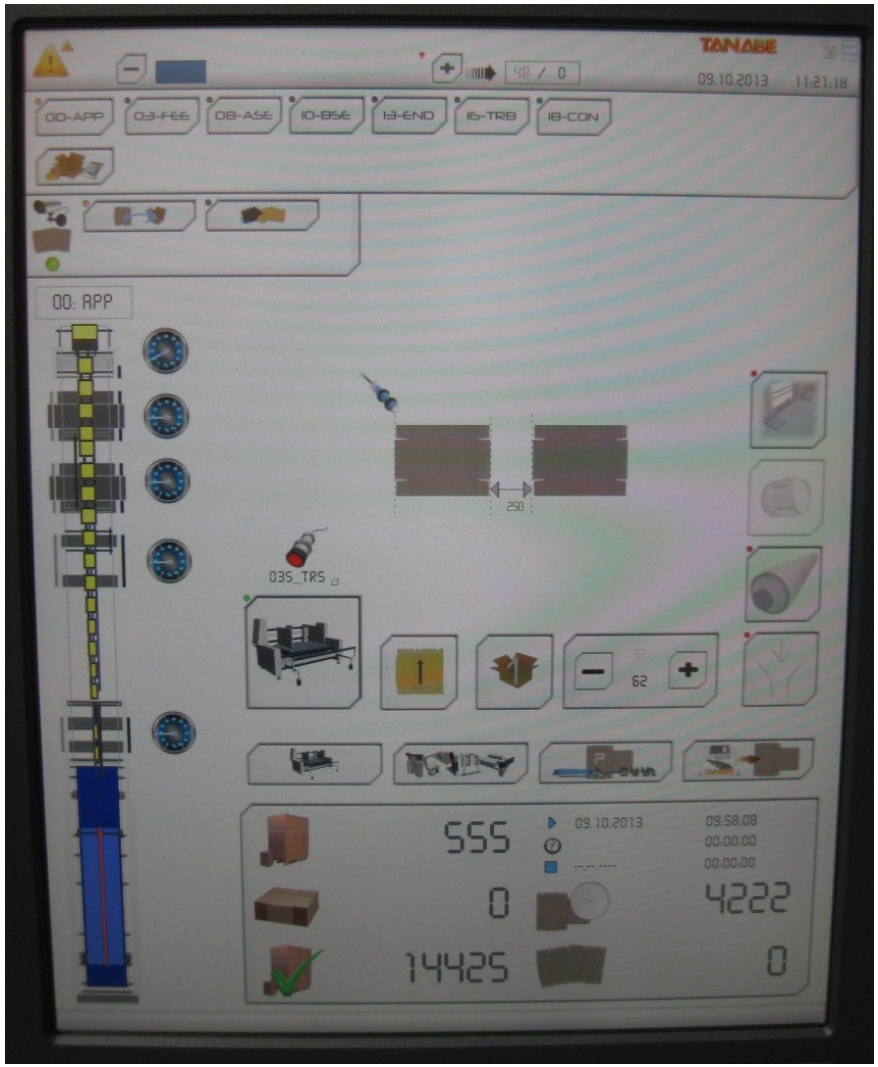

Control system

The Tanabe comes standard with 3 master 19” touch screens.

(as an option every unit on both sides of the machine can get a touch screen)

Control system

Control system

Completely visualized setup

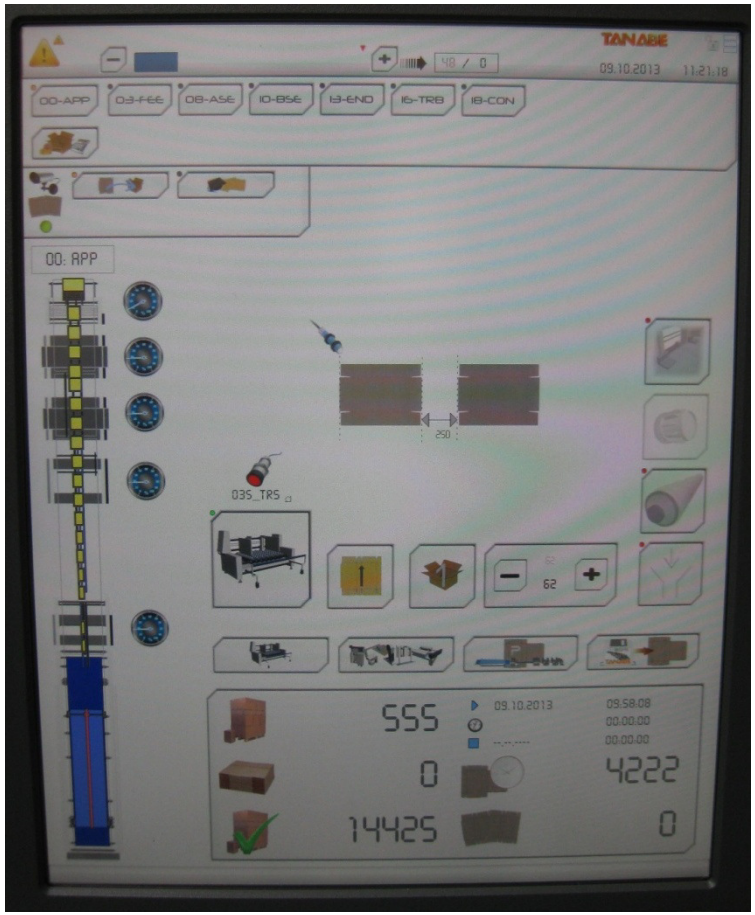

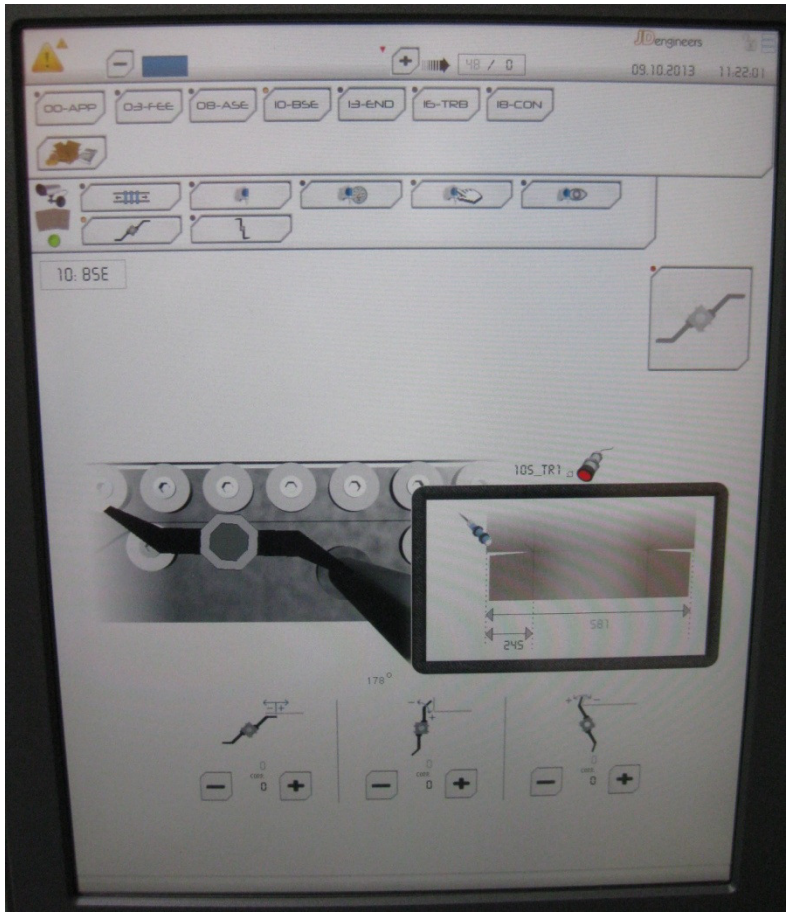

Options: T-unit

The T-unit is an extra unit to make leak proof boxes and double fold boxes. Double fold means folding the side panels 2 times for more strength.

Options: E-unit

The E-unit is an extra unit to eject bad boxes or sample boxes.

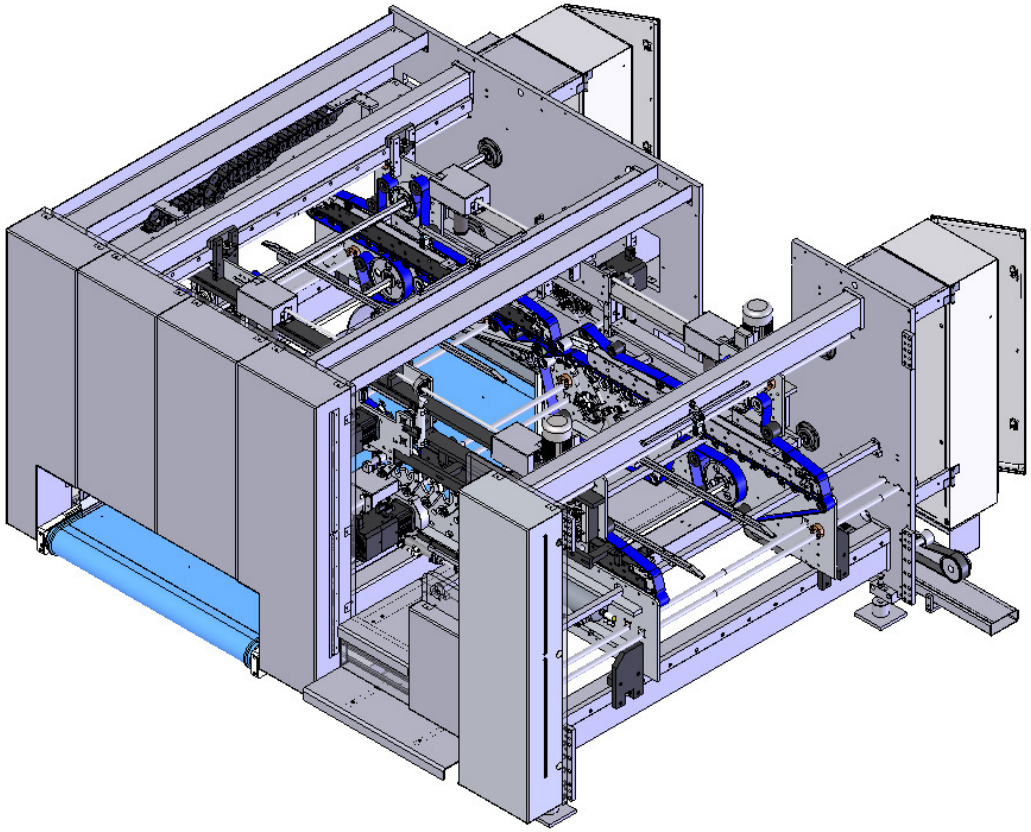

Options: E-unit

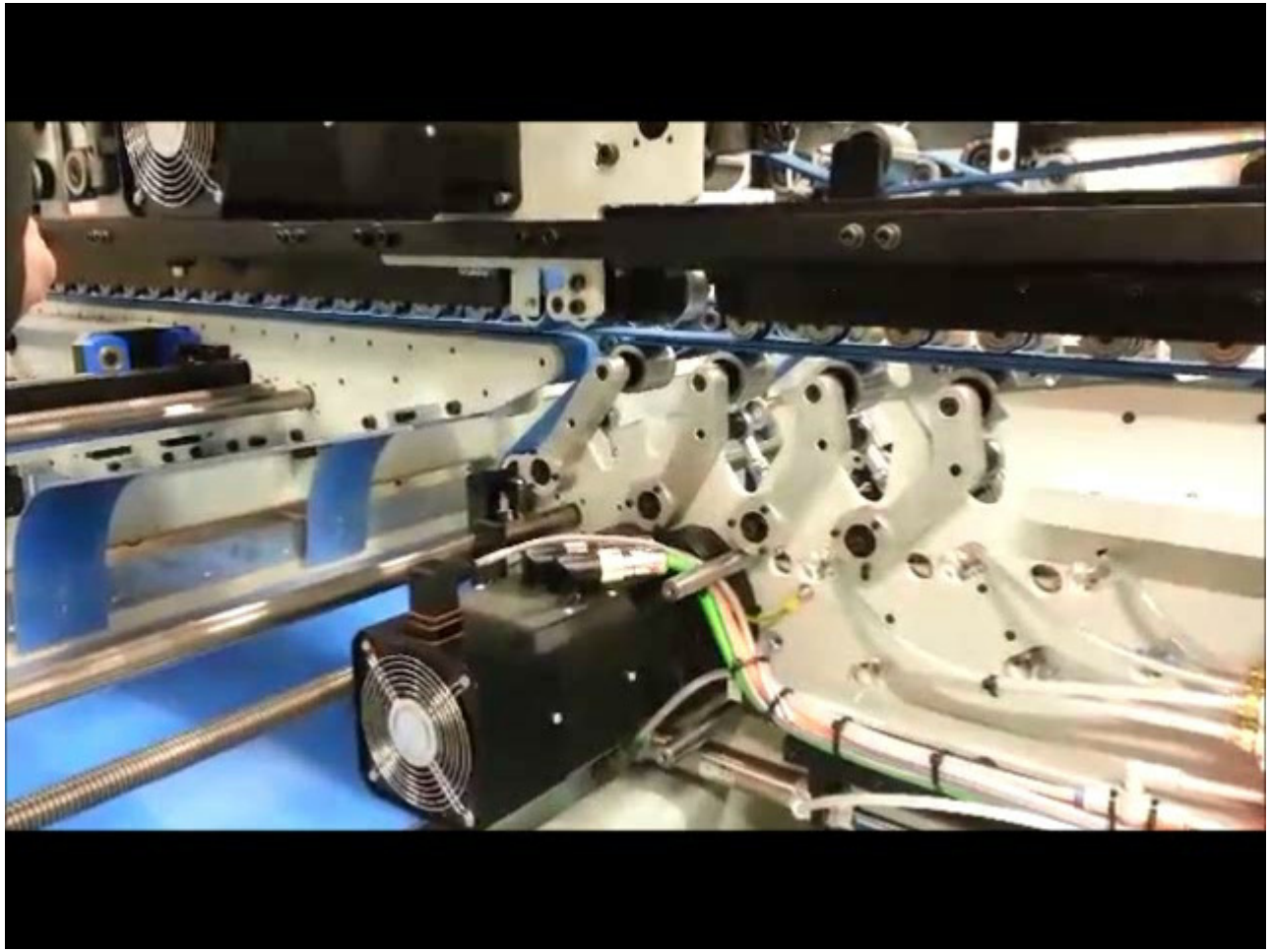

Options: Tri-feeder

The Tri-feeder is a unit to put 2 or 3 boxes together. Ready shelve boxes and boxes with inserts can be made like this.

Options: Tri-feeder

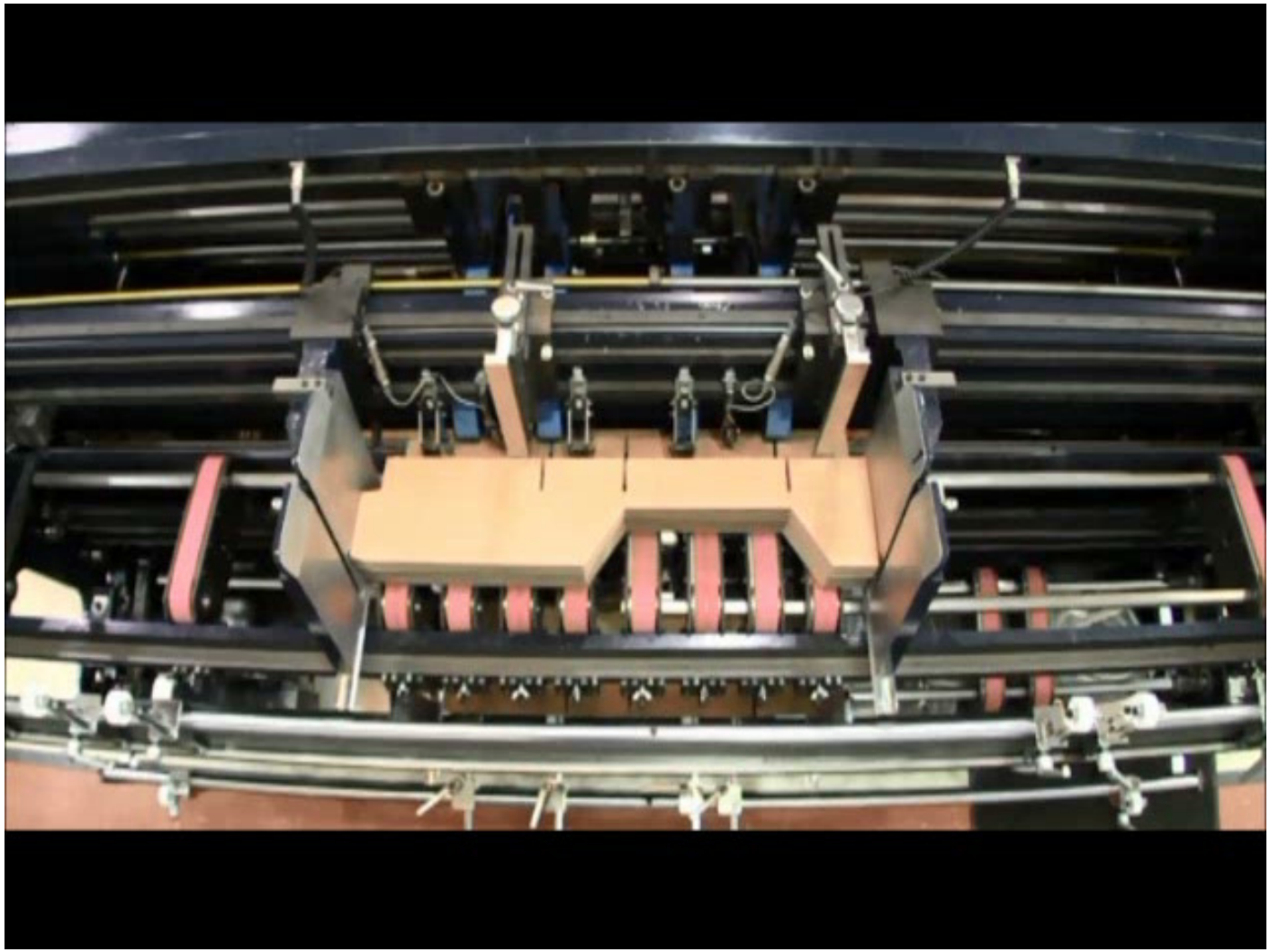

Box editor

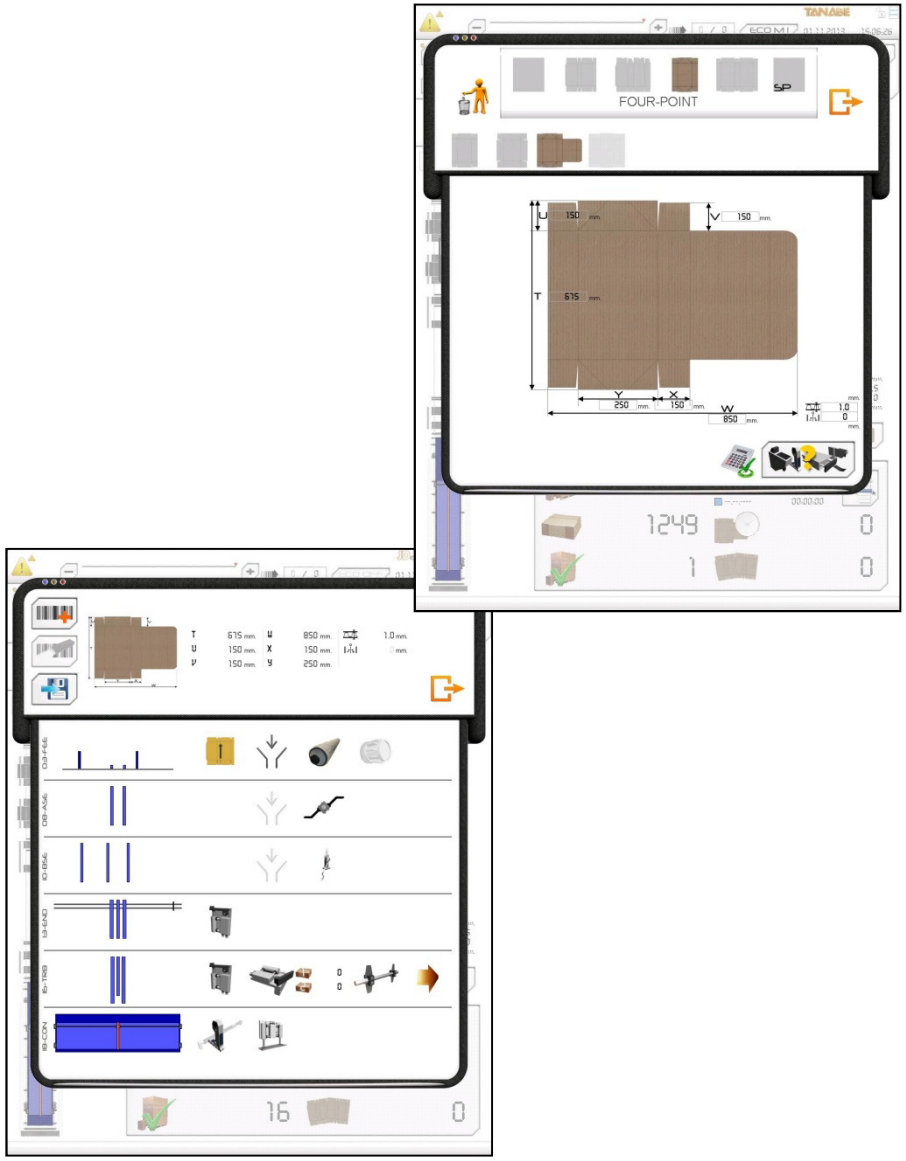

- Entering new boxes by following the box editor.
    1. Choose box type.
    2. Choose box style.
    3. Give in all dimensions.
- Computer calculates all settings and positions.
- If within 20mm of existing box, the computer takes the settings from that already stored box.
- Options can be chosen.

Data manager

- Unlimited number of boxes can be stored.
- Smart searching by number, customer name or other stored information.

Class room training

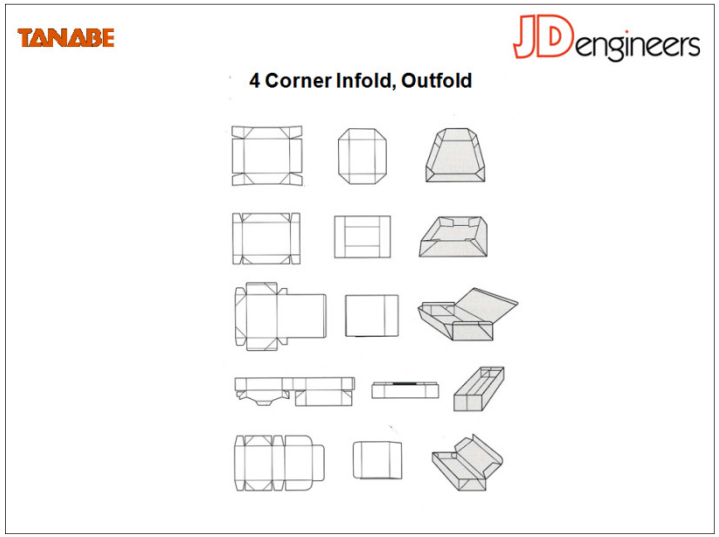

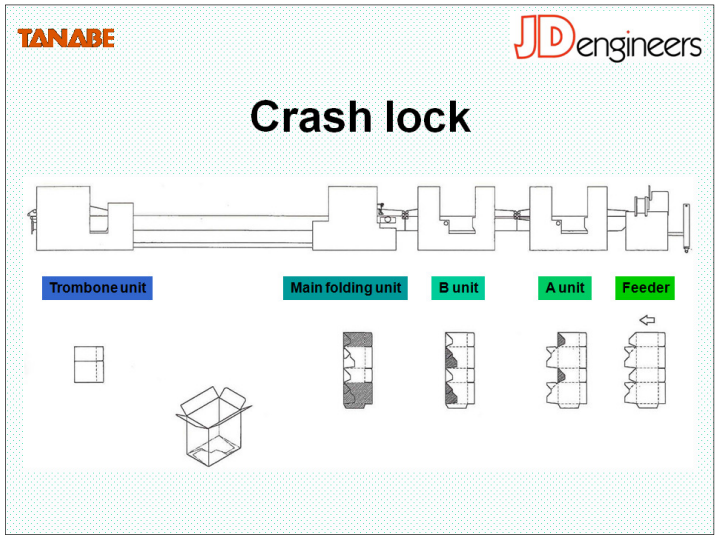

- Class room training for operators and designers.

Tanabe's next Generation

Servo controlled design

- Less waste
- Higher Accuracy
- Modular design
- Section control during finish runs and board jam
- Shorter install time
- More m^2 Board

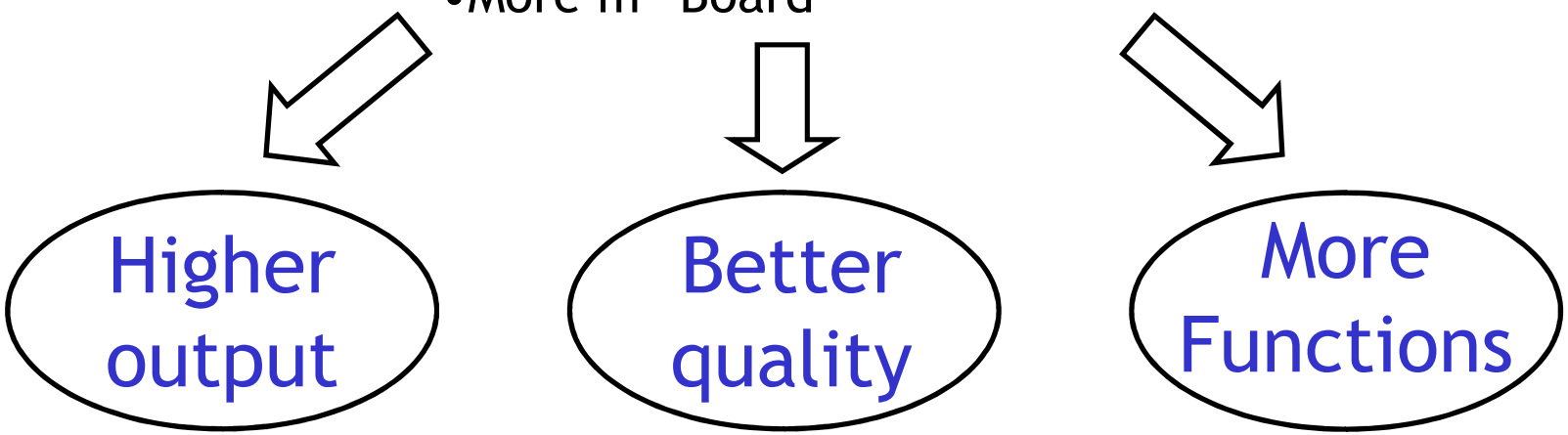

Tanabe's next Generation

Other Benefits / features

- Better product overview with Video system.
- Digital Air pressure control for compression conveyor.
- Less sensor fault by smart placing and use of laser photocells.
- Remote control on each section.
- Quicker setting times, up to 10min per box quicker.
- Fewer rejected boxes, up to 70% less per box style.
- Ejection system available.

ALLIANCE
Machine Systems Europe BV

Tanabe's next Generation

Thank you for your attention !

TANABE
International Co., Ltd.

JDengineers